VMAN ENGINE

2023

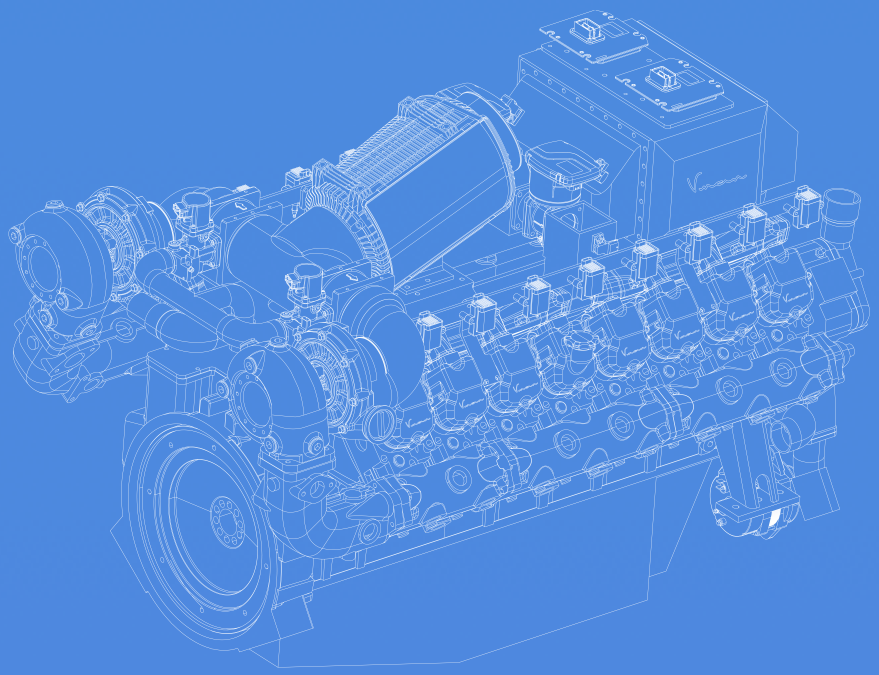

007

Vman

ABOUT VMAN ENGINE



Vman® is a set design, research and development, production, sales as one of the most professional engine manufacturing enterprises located in Shanghai. The company was founded in 2007 by importing the technology of high power diesel engine. After constant study abroad and imported machine (CBU) .The parts assembly (CKD) localization, builds a skilled and cohesive enterprise team.

The company constantly develop new products, adopt advanced manufacturing technology sophisticated production equipment, rich experience in production management, modern test methods to build perfect VMAN brand. Products have been strictly controlled from the design, procurement, technology, field, quality and other aspects, design and manufacture with domestic and international standards.

Our main products cover automotive, engineering machinery, generator sets, marine and other fields. Including diesel engine and gas engine. Powers range from 25 -2000kW, Emissions meet the second stage, and the third stage.

VMAN Engines is headquartered in Shanghai, with a factory in Changzhou, China.

VMAN has a branch in Singapore and planning for a European branch.

Table Of Content

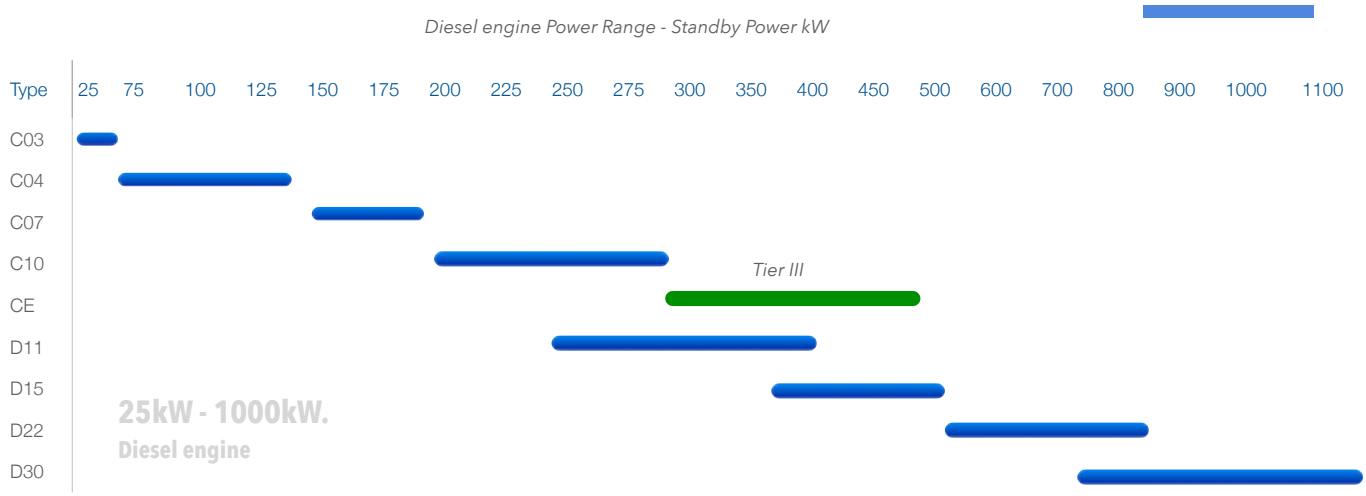

005 C Series Engine
25 kw to 283 kW

018 CE Series Engine
295 kw to 455 kW

030 D Series Engine
240 kw to 1000 kW

047 GAS Engine
295 kw to 500 kW

054 Marine Engine
318 kw to 715kW

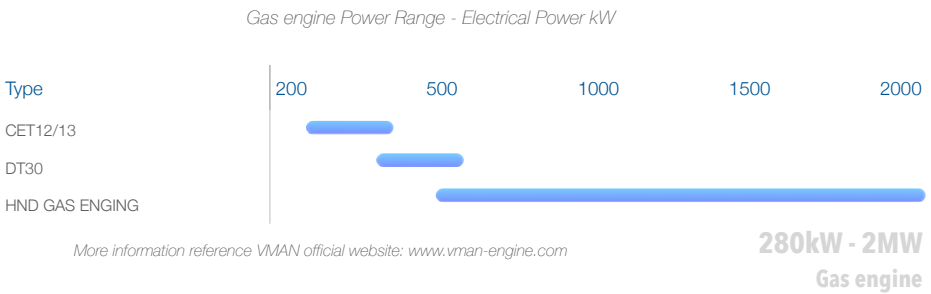

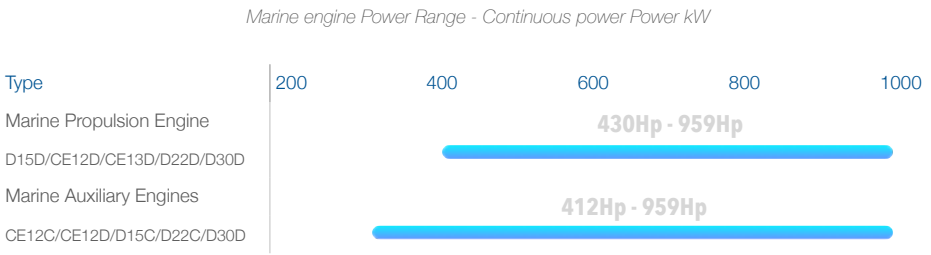

History

2007-2008

- **Importing technology & Drawing interpretation**

Part drawing, assemble drawing,
machine drawing, QA system, etc

2008 2009

- **Learning & Training**

5 times staff training abroad
4 times professors to our factory for guidance

From 2009

- **CKD & CBU Diesel engines**

Getting aptitude of assembling CKD diesel engine,Match up CBU&CKD diesel engines with Customers

2009 2014

- **Build new factory in Shanghai**

Realize home manufacture and finish all series of V6 V8 V12 V16 engine and get excellent feedback from customers

From 2015

- **Starting international trading business**

Now had export to Korea, Taiwan, Indonesia, Algeria, NigPakistan, Malaysia, UAE, Vietnam, Poland, Albania, Argentina and other countries.

2019 2021

- **Building New Branch factory**

In ChangZhou City, Extend more power range products
In particular high power engines up to 2MW.

2020 2022

- **New C & CE series Engines Launch**

Develop New C&CE series Engines and put to the market.Extend full power range from 62kW to 1100kW

From 2022

- **Set up branch in Singapore**

VMAN Engine Singapore Pte, Ltd set up on July.2022..
Provide technical training and service support for the global market.



New branch factory in ChangZhou City

MANUFACTURER

VMAN Engine has fully advanced manufacture process and quality management system. We are well-equipped and experienced in modern production management. We take vigorous position in part assembly and debug to prevent the leak of gas, water and oil, we inspect all the engines with standard leak test to guarantee the tightening quality ,we use ESTIC technology(Japanese Nut runner machine) on all key bolts. Each engine will be debugged before going to the market.

❖ **Used advanced instruction**

Overall test equipments are imported from famous engine company. All the engines shall meet the technical standards during on-site trials;

❖ **Multi-level testing and 110% Load testing**

Each engine will be proceeding multi-level testing according to the customer's requirements, and also proceeding 110% load testing, sudden loading and unloading testing to ensure our engine's quality.



❖ **Quality management system ISO9001:2015 certification**

Manufacturer line use advanced methods including auto-delivery, rotary carriers, cylinder press fitting and front-rear oil seal press fitting, etc, to have control of production and quality.







C Series Engine

The C series diesel engine, is a small-power, four-valve diesel engine with six cylinders that is newly developed by VMAN Company.

Featuring strong power and low fuel consumption and with the emissions conforming to relevant national regulations, C series diesel engine is an ideal supporting power for the middle-end and high-end vehicles and industrial equipments.

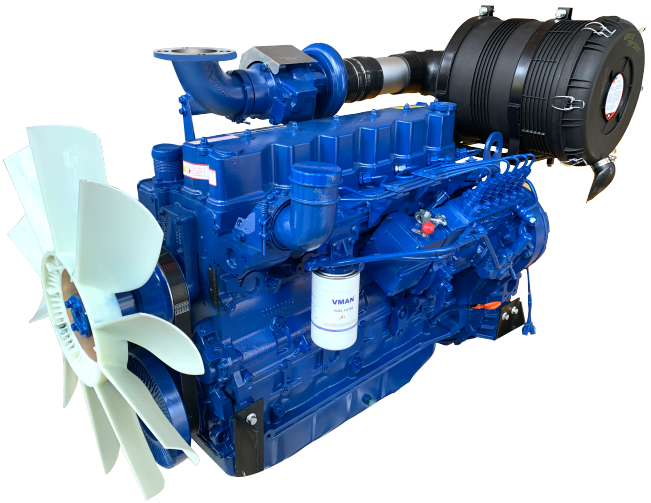

Model	Type	Rate Speed	Standby Power	Prime Power	DIS	Fuel Consumption (L/H)		Firing Sequence	Size	Flywheel
		(r/min)	(kW)	(kW)	(L)	0.75	1		(mm)	
C03A2	L4	1500	28	25	2.5	5.1	6.8	1-3-4-2	858x541x730	SAE4#7.5
C03A1			42	38		7.7	10.3			
C03A			53	48		9.2	12.3			
C04A3	L4		68	62	4.3	11.8	15.1	1-3-4-2	1018x716x989	SAE3#11.5
C04A2			86	78		14.6	19.5			
C04A1			115	105		17.8	23.8		1213x760x1010	
C04A			132	120		20.4	27.2			
C07A1	L6		170	155	6.5	26.6	35.7	1-5-3-6-2-4	1330x789x1079	SAE3#11.5
C07A			187	170		29.5	39.7			
C10A	L6		258	235	10	41.6	57.9	1-5-3-6-2-4	1852x920x1453	SAE1#14
C10AP			283	258		63.7	70.7			
C03B2	L4	1800	28	25	2.5	5.1	6.8	1-3-4-2	858x541x730	SAE4#7.5
C03B1			42	38		7.7	10.3			
C03B			53	48		9.2	12.3			
C04B3	L4		68	62	4.3	12.3	16.4	1-3-4-2	1018x716x989	SAE3#11.5
C04B2			86	78		14.7	19.6			
C04B1			132	120		17.8	23.8		1123x760x1010	
C04B			115	105		20.4	27.2			
C07B1	L6		175	160	6.5	29.5	39.1	1-5-3-6-2-4	1330x789x1079	SAE3#11.5
C07B			198	180		32.8	43.4			
C10B	L6		270	245	10	47.8	56.3	1-5-3-6-2-4	1852x920x1453	SAE1#14
C10BP			283	258		64.3	71.4			

C03 Series Engine

RATINGS DEFINITION

The power ratings of Emergency Standby and Prime are in accordance with the standard of IS08528. Fuel Stop power in accordance with the standard of ISO3046. Electric power (kW) should be estimated by considering generator efficiency, cooling fan power loss and power derating based on altitude and temperature.

STANDBY POWER RATING is applicable for supplying emergency power for the duration of the utility power outage. No overload capability is available for this rating. A standby rated engine should be sized for a maximum of 70% average load factor and 200 hours of operation per year, this includes less than 25 hours per year at the Standby Power rating.

PRIME POWER RATING is available for an unlimited of hours per year in variable load application. Variable load should not exceed 70% average the Prime Power rating during any operating period hours.The total operating time at 100% Prime Power shall not exceed 500 hours per year.
10% overload capability is available for a period of 1 hour within a 12 hours period of operation. Total operating time at the 10% overload power shall not exceed 25 hours per year,

CONTINUOUS POWER RATING is the power that the engine can continue to use under the prescribed speed and the specific environment condition in the normal maintenance period stipulated in the manufacturing plant. Continuous power applicable for supplying utility power at a constant 100% for an unlimited number of hours per year. No overload capability is available for this rating.



GENERAL ENGINE DATA

Engine Model	C03A2	C03A1	C03A	C03B2	C03B1	C03B
Engine Type	4-Cylinder					
Engine Type	Naturally aspirated	Turbo charged	Turbo charged Intercooled	Naturally aspirated	Turbo charged	Turbo charged Intercooled
Prime power (kW/Ps)	25/34	40/54	50/67	25/34	40/54	50/67
Standby power (kW/Ps)	28/38	44/60	55/74	28/38	44/60	55/74
Continuous power (kW/Ps)	23/31	35/48	45/60	23/31	35/48	45/60
Speed	1500 rpm			1800 rpm		
Bore x stroke	89x100 mm					
Displacement	2.5L					
Compression ratio	17.5 : 1					
Rotation {Looking at flywheel}	Counter clockwise {CCW}					
Firing order	1-3-4-2					
Injection timing	14°BTDC	10°BTDC	10°BTDC	14°BTDC	10°BTDC	10°BTDC
Dry weight {W/O cooling system}	230kg	240kg	250kg	230kg	240kg	250kg
Dimension {L x W x H}	850x541x730mm					
Flywheel housing	SAE 4 #					
Flywheel	7.5					
Number of teeth on flywheel	117					
Piston speed	5 m/s			6 m/s		
ENGINE MOUNTING						
Max.Bending Moment at Rear Face to Block	159N.m	242N.m	306N.m	159N.m	242N.m	306N.m

C03 Series Engine

INTAKE & EXHAUST SYSTEM

Engine Model	C03A2	C03A1	C03A	C03B2	C03B1	C03B
Max.Intake Restriction (kPa)	5					
Max.Exhaust Back Pressure (kPa)	10					
Combustion Air Consumption (m³/h)	167	250	316	167	250	316
Max.Exhaust Temp.(After Turbo°C)	650	600	600	650	600	600
Exhaust Gas Flow (m³/h)	501	643	812	501	643	812
Cooling fan air flow (m³/min)	105	105	105	122	122	122

COOLING SYSTEM
Water circulation by centrifugal pump on engine

Engine Model	C03A2	C03A1	C03A	C03B2	C03B1	C03B
Coolant capacity	15L					
Max.Permissible Temperature	96 °C					
Max.Coolant warning Temperature	97 °C					
Max.Coolant Shutdown Temperature	99 °C					
Thermostat Open Temperature	80 °C					
Max.external coolant system restriction	Not available					

Two radiator options are provided, based on allowable maximum Air temperature On radiator inlet (Air On 40 °C) Air On 50 °C

- *ATB (Ambient Temperature before Boiling) of generator set varies depending on the engine room ventilation design, even if the same radiator applied. Adequate selection of radiator options by means of the cooling test is highly recommended, and generator set makers are responsible for the selection.*

FUEL SYSTEM
In-line pump with integrated, electromagnetic actuator

Engine Model	C03A2	C03A1	C03A	C03B2	C03B1	C03B
Governor	GAC Digital Pump Governor DGP100-101					
Speed drop	G2 Class (ISO 8528)					
Feed pump	Mechanical type in pump					
Injection nozzle	Multi hole type					
Opening pressure	24 MPa					
Fuel filter	Full flow					
Maximum fuel inlet restriction	100 kPa					
Maximum fuel return restriction	5=20 kPa					
Fuel feed pump Capacity	1.2L/min					
Fuel	Diesel fuel					
Fuel Consumption of generator set						
Standby power- 100% load (l/h)	6.9	10.7	12.5	6.9	10.7	12.5
Prime power - 100% load (l/h)	6.3	9.8	11.8	6.3	9.8	11.8
- 75% load (l/h)	4.7	7.3	8.8	4.7	7.3	8.8
- 50% load (l/h)	3.1	4.9	5.9	3.1	4.9	5.9
- 25% load (l/h)	1.6	2.4	2.9	1.6	2.4	2.9
Continous power - 100% load (l/h)	5.8	8.5	10.6	5.8	8.5	10.6
Lowest Fuel Consumption Ratio(g/kW.h)	210.0	205.0	198.0	210.0	205.0	198.0

LUBRICATION SYSTEM

Force-feed lubrication by gear pump, lubricating oil cooling water circuit of engine

	Force-feed lubrication by gear pump, lubricating oil cooling water circuit of engine
Lub.Method	Fully forced pressure feed type
Oil filter	Full flow, cartridge type
Lube oil specification	CF-4
Lube oil pressure	Idle Speed : Min 100 kPa
	Governed Speed: Min 200 kPa
Maximum oil temperature	125
Max.Permissible Oil Temperature	120 °C
Oil Consumption (as % of fuel consumption)	≤0.2
Oil capacity	7 L

ELECTRICAL SYSTEM

Engine Model	C03A2	C03A1	C03A	C03B2	C03B1	C03B
Charging Alternator Voltage			14 V			28 V
Charging Alternator Capacity			55 A			35 A
Voltage regulator			Built-in type IC regulator			
Starting motor			3.8kW			
Battery Voltage			12VDC			
Battery Capacity			180Ah x 1			
Starting aid (Option)			/			

VALVE SYSTEM

Type	Overhead valve type	
Number of valve	Intake 1, exhaust 1 per cylinder	
Valve lashes at cold	Intake 0.28 mm, Exhaust 0.28 mm	
Valve timing		
	Opening	Close
- Intake valve	14 deg.BTDC	46 deg.ABDC
- Exhaust valve	46 deg.BBDC	14deg.ATDC

C03 SERIES DIESEL ENGINE DRAWING

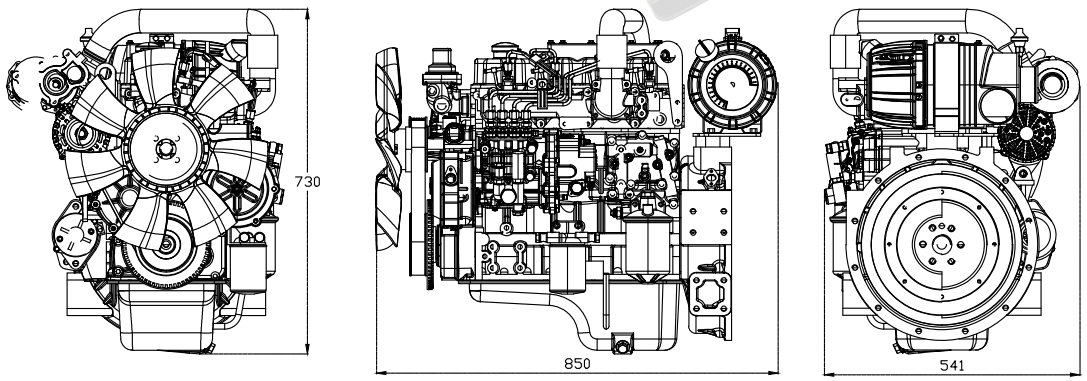

C04 Series Engine

RATINGS DEFINITION

The power ratings of Emergency Standby and Prime are in accordance with the standard of IS08528. Fuel Stop power in accordance with the standard of ISO3046. Electric power (kW) should be estimated by considering generator efficiency, cooling fan power loss and power derating based on altitude and temperature.

STANDBY POWER RATING is applicable for supplying emergency power for the duration of the utility power outage. No overload capability is available for this rating. A standby rated engine should be sized for a maximum of a 70% average load factor and 200 hours of operation per year, this includes less than 25 hours per year at the Standby Power rating.

PRIME POWER RATING is available for an unlimited of hours per year in variable load application. Variable load should not exceed 70% average the Prime Power rating during any operating period hours., The total operating time at 100% Prime Power shall not exceed 500 hours per year.
10% overload capability is available for a period of 1 hour within a 12 hours period of operation. Total operating time at the 10% overload power shall not exceed 25 hours per year,

CONTINUOUS POWER RATING is the power that the engine can continue to use under the prescribed speed and the specific environment condition in the normal maintenance period stipulated in the manufacturing plant. Continuous power applicable for supplying utility power at a constant 100% for an unlimited number of hours per year. No overload capability is available for this rating.



GENERAL ENGINE DATA

Engine Model	C04A3	C04A2	C04A1	C04A	C04B3	C04B2	C04B1	C04B
Engine Type	4-Cylinder,							
Engine Type	Turbo charged		Turbo charged & intercooled (air to air)		Turbo charged		Turbo charged & intercooled (air to air)	
Prime power (kW/Ps)	62/84	78/106	105/143	120/163	62/84	78/106	105/143	120/163
Standby power (kW/Ps)	68/92	86/117	115/156	132/180	68/92	86/117	115/156	132/180
Continuous power (kW/Ps)	62/84	78/106	105/143	120/163	62/84	78/106	105/143	120/163
Speed	1500 rpm				1800 rpm			
Bore x stroke	105x124 mm							
Displacement	4.3L							
Compression ratio	17.3：1		16：1		17.3：1		16：1	
Rotation {Looking at flywheel}	Counter clockwise {CCW}							
Firing order	1-3-4-2							
Injection timing	10°BTDC@ 1500 rpm				10° BTDC@ 1800 rpm			
Dry weight {W/O cooling system}	460 kg							
Dimension {L x W x H}	1018x716x989 mm		1123x760x1010 mm		1018x716x989 mm		1123x760x1010 mm	
Flywheel housing	SAE 3 #							
Flywheel	SAE 11.5 #							
Number of teeth on flywheel	127							
Piston speed	6.2 m/s				7.44 m/s			
ENGINE MOUNTING								
Max.Bending Moment at Rear Face to Block	547.5N.m		764 N.m		547.5N.m		764 N.m	

INTAKE & EXHAUST SYSTEM

Engine Model	C04A3	C04A2	C04A1	C04A	C04B3	C04B2	C04B1	C04B
Max.Intake Restriction (kPa)	6							
Max.Exhaust Back Pressure (kPa)	<10							
Combustion Air Consumption (m³/h)	336		480		432		600	
Max.Exhaust Temp.(After Turbo°C)	600		600		600		600	
Exhaust Gas Flow (m³/h)	792		1146		1020		1404	
Cooling fan air flow (m³/min)	180		210		216		252	

COOLING SYSTEM

Water circulation by centrifugal pump on engine

Engine Model	C04A3	C04A2	C04A1	C04A	C04B3	C04B2	C04B1	C04B
Coolant capacity	15 L		15 L		15 L		15 L	
Max.Permissible Temperature	90 °C		87 °C		90 °C		87 °C	
Max.Coolant warning Temperature	96 °C		94 °C		96 °C		94 °C	
Max.Coolant Shutdown Temperature	99 °C		99 °C		99 °C		99 °C	
Thermostat Open Temperature	82 °C		82 °C		82 °C		82 °C	
Max.external coolant system restriction	Not available		Not available		Not available		Not available	

Two radiator options are provided, based on allowable maximum Air temperature On radiator inlet (Air On 40 °C) Air On 50 °C

- *ATB (Ambient Temperature before Boiling) of generator set varies depending on the engine room ventilation design, even if the same radiator applied. Adequate selection of radiator options by means of the cooling test is highly recommended, and generator set makers are responsible for the selection.*

FUEL SYSTEM

In-line pump with integrated, electromagnetic actuator

Engine Model	C04A3	C04A2	C04A1	C04A	C04B3	C04B2	C04B1	C04B
Governor	Electric type (VMAN DSC 100-07)							
Speed drop	G2 Class (ISO 8528)							
Feed pump	Mechanical type in pump							
Injection nozzle	Multi hole type							
Opening pressure	25 MPa							
Fuel filter	Full flow, Cartridge type with water drain valve							
Maximum fuel inlet restriction	25 kPa							
Maximum fuel return restriction	50 kPa							
Fuel feed pump Capacity	310 liters / hr							
Fuel	Diesel fuel							
Fuel Consumption of generator set								
Standby power- 100% load (l/h)	15.6	19.7	26.4	30.3	15.6	19.7	26.4	30.3
Prime power - 100% load (l/h)	14.2	17.9	24.1	27.5	14.2	17.9	24.1	27.5
- 75% load (l/h)	10.7	13.4	18.1	20.6	10.7	13.4	18.1	20.6
- 50% load (l/h)	7.1	8.9	12.0	13.8	7.1	8.9	12.0	13.8
- 25% load (l/h)	3.6	4.5	6.0	6.9	3.6	4.5	6.0	6.9
Continous power - 100% load (l/h)	14.2	17.9	24.1	27.5	14.2	17.9	24.1	27.5
Lowest Fuel Consumption Ratio(g/kW.h)	195.0	195.0	195.0	195.0	195.0	195.0	195.0	195.0

C04 Series Engine

LUBRICATION SYSTEM

Force-feed lubrication by gear pump, lubricating oil cooling water circuit of engine

	Force-feed lubrication by gear pump, lubricating oil cooling water circuit of engine
Lub.Method	Fully forced pressure feed type
Oil filter	Full flow, cartridge type
Lube oil specification	CF-4
Lube oil pressure	Idle Speed : Min 70 kPa
	Governed Speed: Min 207 kPa
Maximum oil temperature	115 °C
Max.Permissible Oil Temperature	98 °C
Oil Consumption (as % of fuel consumption)	≤0.2
Oil capacity	13 L

ELECTRICAL SYSTEM

Engine Model	C04A3	C04A2	C04A1	C04A	C04B3	C04B2	C04B1	C04B
Charging Alternator Voltage	13.8V or 28V							
Charging Alternator Capacity	35A							
Voltage regulator	Built-in type IC regulator							
Starting motor	4.5kW/24V or 4.2kW/12V							
Battery Voltage	24V or 12V							
Battery Capacity	2* 120Ah or 120Ah (recommended)							
Starting aid (Option)	Block heater (Min. Temperature for Unaided Cold Start -10°C)							

VALVE SYSTEM

Type	Overhead valve type	
Number of valve	Intake 2, exhaust 2 per cylinder	
Valve lashes at cold	Intake 0.25 mm, Exhaust 0.50 mm	
Valve timing		
	Opening	Close
- Intake valve	20.9 deg.BTDC	44.9 deg.ABDC
- Exhaust valve	51.7 deg.BBDC	11.7 deg.ATDC

C04 SERIES DIESEL ENGINE DRAWING

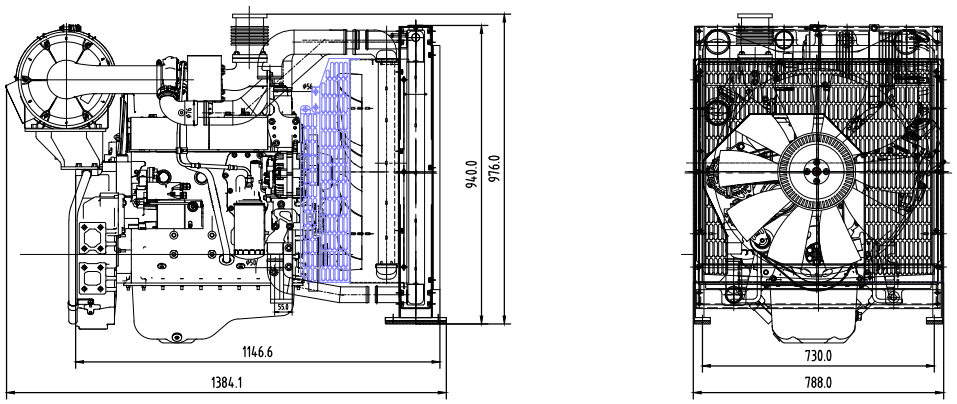

C07 Series Engine

RATINGS DEFINITION

The power ratings of Emergency Standby and Prime are in accordance with the standard of IS08528. Fuel Stop power in accordance with the standard of ISO3046. Electric power (kW) should be estimated by considering generator efficiency, cooling fan power loss and power derating based on altitude and temperature.

STANDBY POWER RATING is applicable for supplying emergency power for the duration of the utility power outage. No overload capability is available for this rating. A standby rated engine should be sized for a maximum of 70% average load factor and 200 hours of operation per year, this includes less than 25 hours per year at the Standby Power rating.

PRIME POWER RATING is available for an unlimited of hours per year in variable load application. Variable load should not exceed 70% average the Prime Power rating during any operating period hours., The total operating time at 100% Prime Power shall not exceed 500 hours per year.
10% overload capability is available for a period of 1 hour within a 12 hours period of operation. Total operating time at the 10% overload power shall not exceed 25 hours per year,

CONTINUOUS POWER RATING is the power that the engine can continue to use under the prescribed speed and the specific environment condition in the normal maintenance period stipulated in the manufacturing plant. Continuous power applicable for supplying utility power at a constant 100% for an unlimited number of hours per year. No overload capability is available for this rating.

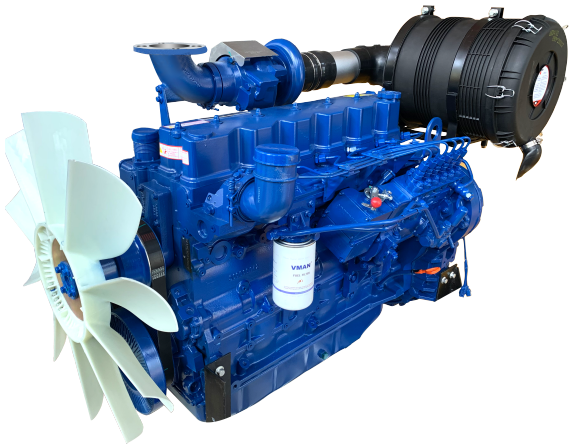

GENERAL ENGINE DATA

Engine Model	C07A1	C07A	C07B1	C07B
Engine Type	6-Cylinder, Turbo charged & intercooled (air to air)			
Prime Power (kW/Ps)	155/211	170/231	160/218	180/244
Standby Power (kW/Ps)	170/231	187/254	175/244	198/269
Continuous Power (kW/Ps)	124/169	135/183	128/174	140/190
Speed	1500 rpm		1800 rpm	
Bore x stroke	105x124 mm			
Displacement	6.5 L			
Compression ratio	16:1			
Rotation {Looking at flywheel}	Counter clockwise {CCW}			
Firing order	1-5-3-6-2-4			
Injection timing	12°±0.5° BTDC @ 1500 rpm		12°±0.5° BTDC@ 1800 rpm	
Dry weight {W/O cooling system}	600 kg			
Dimension with radiator {L x W x H}	1461x 870x1206 mm			
Flywheel housing	SAE 3 #			
Flywheel	SAE (11-1/2) #			
Number of teeth on flywheel	127			
Piston speed	6.5 m/s		7.8 m/s	
ENGINE MOUNTING				
Max.Bending Moment at Rear Face to Block	1120 N.m			

C07 Series Engine

INTAKE & EXHAUST SYSTEM

Engine Model	C07A1	C07A	C07B1	C07B
Max.Intake Restriction (kPa)	6			
Max.Exhaust Back Pressure (kPa)	<10			
Combustion Air Consumption (m³/h)	714		882	
Max.Exhaust Temp.(After Turbo°C)	600			
Exhaust Gas Flow (m³/h)	1686		2088	
Cooling fan air flow (m³/h)	252		277	

COOLING SYSTEM
Water circulation by centrifugal pump on engine

Coolant capacity	32 L
Max.Permissible Temperature	90 °C
Max.Coolant warning Temperature	95 °C
Max.Coolant Shutdown Temperature	99 °C
Thermostat Open Temperature	82 °C
Max.external coolant system restriction	Not available

Two radiator options are provided, based on allowable maximum Air temperature On radiator inlet (Air On 40 °C) Air On 50 °C

- *ATB (Ambient Temperature before Boiling) of generator set varies depending on the engine room ventilation design, even if the same radiator applied. Adequate selection of radiator options by means of the cooling test is highly recommended, and generator set makers are responsible for the selection.*

FUEL SYSTEM
In-line pump with integrated, electromagnetic actuator

Engine Model	C07A1	C07A	C07B1	C07B
Governor	Electric type (Original GAC from USA)			
Speed drop	G2 Class (ISO 8528)			
Feed pump	Mechanical type in pump			
Injection nozzle	Multi hole type			
Opening pressure	25 MPa			
Fuel filter	Full flow, Cartridge type with water drain valve			
Maximum fuel inlet restriction	25 kPa			
Maximum fuel return restriction	50 kPa			
Fuel feed pump Capacity	450 liters / hr			
Fuel	Diesel fuel			
Fuel Consumption of generator set				
Standby power- 100% load (l/h)	39.4	43.3	43.8	48.2
Prime Power - 100% load (l/h)	35.9	39.4	39.0	43.8
- 75% load (l/h)	26.9	29.6	29.2	32.9
- 50% load (l/h)	18.0	19.7	19.5	21.9
- 25% load (l/h)	9.0	9.9	9.7	11.0
Continous power - 100% load (l/h)	28.7	31.3	31.2	34.1
Lowest Fuel Consumption Ratio(g/kW.h)	197.0	197.0	207.0	207.0

LUBRICATION SYSTEM

Force-feed lubrication by gear pump, lubricating oil cooling water circuit of engine

	Force-feed lubrication by gear pump, lubricating oil cooling water circuit of engine
Lub.Method	Fully forced pressure feed type
Oil filter	Full flow, cartridge type
Lube oil specification	CF-4
Lube oil pressure	Idle Speed : Min 80 kPa
	Governed Speed: Min 200 kPa
Maximum oil temperature	115 °C
Max.Permissible Oil Temperature	98 °C
Oil Consumption (as % of fuel consumption)	≤0.2
Oil capacity	18 L

ELECTRICAL SYSTEM

Charging Alternator Voltage	28V
Charging Alternator Capacity	35A
Voltage regulator	Built-in type IC regulator
Starting motor	5.5kW
Battery Voltage	24V
Battery Capacity	2 * 120 Ah (recommended)
Starting aid (Option)	Block heater (Min. Temperature for Unaided Cold Start -10°C)

VALVE SYSTEM

Type	Overhead valve type	
Number of valve	Intake 2, exhaust 2 per cylinder	
Valve lashes at cold	Intake 0.25 mm, Exhaust 0.50 mm	
Valve timing		
	Opening	Close
- Intake valve	20.9 deg.BTDC	44.9 deg.ABDC
- Exhaust valve	51.7 deg.BBDC	11.7 deg.ATDC

C07 SERIES DIESEL ENGINE DRAWING

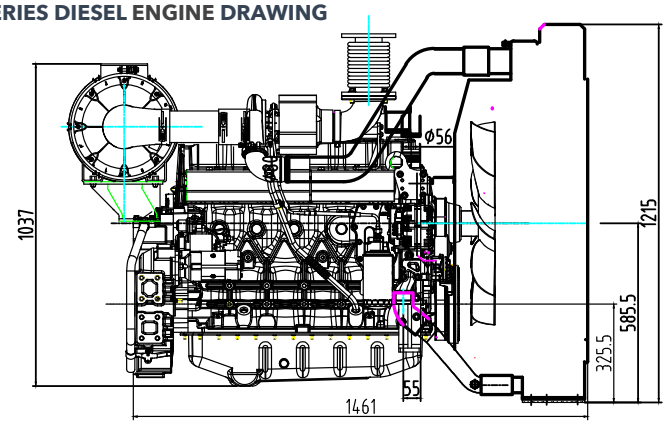

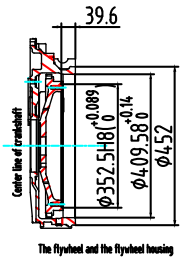

C10 Series Engine

RATINGS DEFINITION

The power ratings of Emergency Standby and Prime are in accordance with the standard of IS08528. Fuel Stop power in accordance with the standard of ISO3046. Electric power (kW) should be estimated by considering generator efficiency, cooling fan power loss and power derating based on altitude and temperature.

STANDBY POWER RATING is applicable for supplying emergency power for the duration of the utility power outage. No overload capability is available for this rating. A standby rated engine should be sized for a maximum of 70% average load factor and 200 hours of operation per year, this includes less than 25 hours per year at the Standby Power rating.

PRIME POWER RATING is available for an unlimited of hours per year in variable load application. Variable load should not exceed 70% average the Prime Power rating during any operating period hours., The Total operating time at 100% Prime Power shall not exceed 500 hours per year.
10% overload capability is available for a period of 1 hour within a 12 hours period of operation. Total operating time at the 10% overload power shall not exceed 25 hours per year,

CONTINUOUS POWER RATING is the power that the engine can continue to use under the prescribed speed and the specific environment condition in the normal maintenance period stipulated in the manufacturing plant. Continuous power applicable for supplying utility power at a constant 100% for an unlimited number of hours per year. No overload capability is available for this rating.

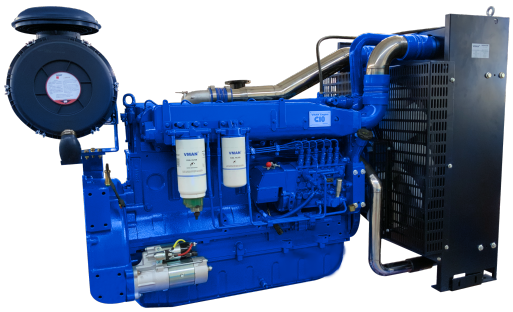

GENERAL ENGINE DATA

Engine Model	C10A	C10AP	C10B	C10BP
Engine Type	Line type 6 -Cylinder, Turbo charged & intercooled (air to air)			
Prime Power (kW/Ps)	235/320	258/350	245/333	258/350
Standby Power (kW/Ps)	258/350	283/385	270/367	283/385
Continuous Power (kW/Ps)	165/224	182/247	172/234	189/257
Speed	1500 rpm		1800 rpm	
Bore x stroke	126 x130 mm			
Displacement	9.726 L			
Compression ratio	17:1			
Rotation {Looking at flywheel}	Counter clockwise {CCW}			
Firing order	1-5-3-6-2-4			
Injection timing	13.5˚±2.5˚ BTDC @ 1500 rpm		13.5˚±2.5˚ BTDC@ 1800 rpm	
Dry weight {W/O cooling system}	1000 kg			
Dimension {L x W x H}	1852 x920 x1453 mm			
Flywheel housing	SAE 1 #			
Flywheel	14			
Number of teeth on flywheel	127			
Piston speed	6.5 m/s		7.8 m/s	
ENGINE MOUNTING				
Max.Bending Moment at Rear Face to Block	1225 N.m			

INTAKE & EXHAUST SYSTEM

Engine Model	C10A	C10AP	C10B	C10BP
Max.Intake Restriction (kPa)	5	5	5	5
Max.Exhaust Back Pressure (kPa)	8	8	8	8
Combustion Air Consumption (m³/h)	1126	1126	1848	1848
Max.Exhaust Temp.(After Turbo°C)	550	550	550	550
Exhaust Gas Flow (m³/h)	2216	2438	2850	3135
Cooling fan are flow(m³/h)	362		401	

COOLING SYSTEM
Water circulation by centrifugal pump on engine

Coolant capacity	45 L
Max.Permissible Temperature	90 °C
Max.Coolant warning Temperature	95 °C
Max.Coolant Shutdown Temperature	99 °C
Thermostat Open Temperature	71 °C
Max.external coolant system restriction	Not available

Two radiator options are provided, based on allowable maximum Air temperature On radiator inlet (Air On 40 °C) Air On 50 °C

- *ATB (Ambient Temperature before Boiling) of generator set varies depending on the engine room ventilation design, even if the same radiator applied. Adequate selection of radiator options by means of the cooling test is highly recommended, and generator set makers are responsible for the selection.*

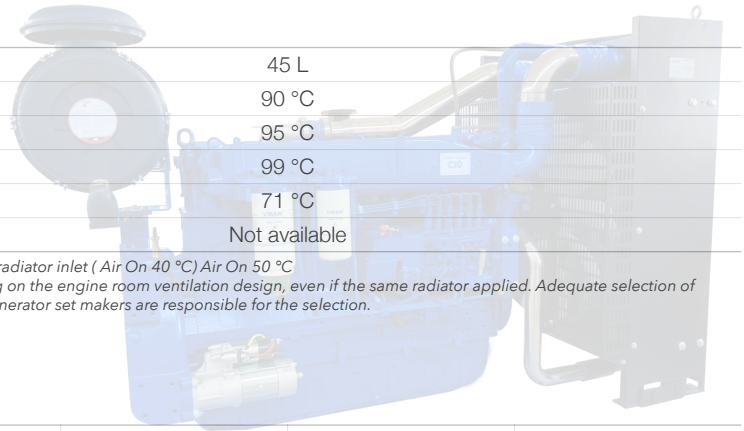

FUEL SYSTEM
In-line pump with integrated, electromagnetic actuator

Engine Model	C10A	C10AP	C10B	C10BP
Governor	Electric type			
Speed drop	G2 Class (ISO 8528)			
Feed pump	Mechanical type in pump			
Injection nozzle	Multi hole type			
Opening pressure	28 MPa			
Fuel filter	Full flow, Cartridge type with water drain valve			
Maximum fuel inlet restriction	30 kPa			
Maximum fuel return restriction	60 kPa			
Fuel feed pump Capacity	630 liters / hr			
Fuel	Diesel fuel			
Fuel Consumption of generator set				
Standby power- 100% load (l/h)	64.3	70.7	70.7	77.8
Prime Power - 100% load (l/h)	57.9	63.7	63.7	70.1
- 75% load (l/h)	41.6	45.8	45.8	50.3
- 50% load (l/h)	29.8	32.8	32.8	36.1
- 25% load (l/h)	14.8	16.3	16.3	17.9
Continous power - 100% load (l/h)	41.8	46.0	46.0	50.6
Lowest Fuel Consumption Ratio(g/kW.h)	205.0	225.5	215.0	215.0

C10 Series Engine

LUBRICATION SYSTEM
Force-feed lubrication by gear pump, lubricating oil cooling water circuit of engine

	Force-feed lubrication by gear pump, lubricating oil cooling water circuit of engine
Lub.Method	Fully forced pressure feed type
Oil filter	Full flow, cartridge type
Lube oil specification	CF-4
Lube oil pressure	Idle Speed : Min 98 kPa
	Governed Speed: Min 294 kPa
Maximum oil temperature	115 °C
Max.Permissible Oil Temperature	98 °C
Oil Consumption (as % of fuel consumption)	≤0.3
Oil capacity	24 L

ELECTRICAL SYSTEM

Charging Alternator Voltage	28V
Charging Alternator Capacity	45A
Voltage regulator	Built-in type IC regulator
Starting motor	8.5kW
Battery Voltage	24V
Battery Capacity	2 x 150 Ah (recommended)
Starting aid (Option)	Block heater (Min. Temperature for Unaided Cold Start -10°C)

VALVE SYSTEM

Type	Overhead valve type	
Number of valve	Intake 2, exhaust 2 per cylinder	
Valve lashes at cold	Intake 0.25 mm, Exhaust 0.50 mm	
Valve timing		
	Opening	Close
- Intake valve	24 deg.BTDC	36 deg.ABDC
- Exhaust valve	63 deg.BBDC	27 deg.ATDC

C10 SERIES DIESEL ENGINE DRAWING

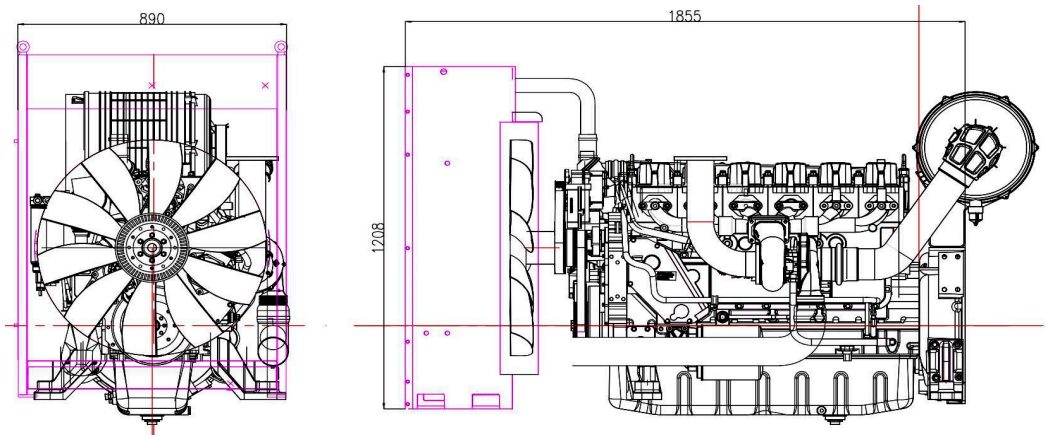

CE Series Engine



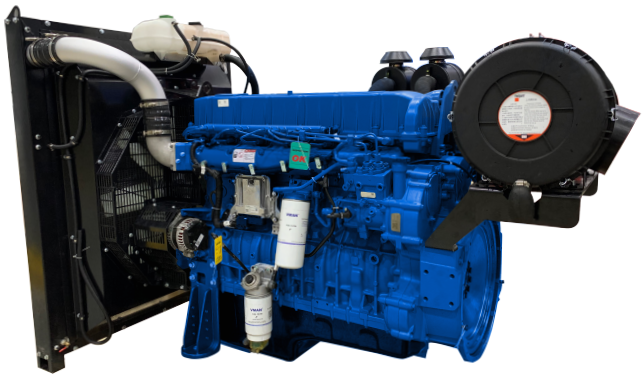

The CE series diesel engine, Adopt in-line 6 cylinders, integral cylinder head, four valves, overhead camshaft, rear gear chamber technology; Professional High pressure common rail fuel injection system;

Instant response speed is fast, 0-270KW sudden increase and decrease, power generation frequency fluctuation is 50Hz/60Hz ±1%;

The overhaul time of the engine reaches 25,000 hours and meets the non-road T3 emission standard.

Model	Type	Rate Speed	Standby Power	Prime Power	DIS	Fuel Consumption (L/H)		Firing Sequence	Size	Flywheel
		(r/min)	(kW)	(kW)	(L)	0.75	1		(mm)	
CE10A	L6	1500	325	295	9.84	45.6	70.2	1-5-3-6-2-4	1334x825x1137	SAE1#14
CE10B		1800	340	310		53.1	62.5			
CE12A	L6	1500	390	355	11.8	53.0	70.0	1-5-3-6-2-4	1373x812x1138	SAE1#14
CE12B		1800	390	355		56.0	75.0			
CE13A	L6	1500	455	415	12.8	64.0	79.0	1-5-3-6-2-4	1432x972x1204	SAE1#14
CE13B		1800	455	415		64.0	87.0			
CE13AP	L6	1500	475	450	12.8	77.0	102.0	1-5-3-6-2-4	1432x972x1204	SAE1#14
CE13BP		1800	475	450		82.0	109.0			

CE10 Series Engine

RATINGS DEFINITION

The power ratings of Emergency Standby and Prime are in accordance with the standard of IS08528. Fuel Stop power in accordance with the standard of ISO3046. Electric power (kW) should be estimated by considering generator efficiency, cooling fan power loss and power derating based on altitude and temperature.

STANDBY POWER RATING is applicable for supplying emergency power for the duration of the utility power outage. No overload capability is available for this rating. A standby rated engine should be sized for a maximum of 70% average load factor and 200 hours of operation per year, this includes less than 25 hours per year at the Standby Power rating.

PRIME POWER RATING is available for an unlimited of hours per year in variable load application. Variable load should not exceed 70% average the Prime Power rating during any operating period hours., The Total operating time at 100% Prime Power shall not exceed 500 hours per year.
10% overload capability is available for a period of 1 hour within a 12 hours period of operation. Total operating time at the 10% overload power shall not exceed 25 hours per year,

CONTINUOUS POWER RATING is the power that the engine can continue to use under the prescribed speed and the specific environment condition in the normal maintenance period stipulated in the manufacturing plant. Continuous power applicable for supplying utility power at a constant 100% for an unlimited number of hours per year. No overload capability is available for this rating.

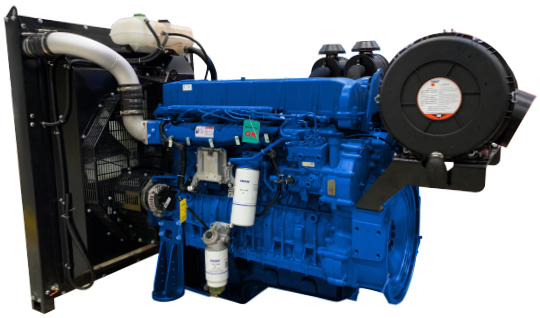

GENERAL ENGINE DATA

Engine Model	CE10A	CE10B
Engine Type	Line type 6 -Cylinder, Turbo charged & intercooled (air to air)	
Prime Power (kW/Ps)	295/401	310/422
Standby Power (kW/Ps)	325/442	340/462
Continuous Power (kW/Ps)	262/356	278/378
Speed	1500 rpm	1800 rpm
Bore x stroke	118 X 150 mm	
Displacement	9.84 L	
Compression ratio	17:1	
Rotation {Looking at flywheel}	Counter clockwise {CCW}	
Firing order	1-5-3-6-2-4	
Injection timing	7°±3° BTDC @ 1500 rpm	9°±2.5° BTDC@ 1800 rpm
Dry weight {W/O cooling system}	980 kg	
Dimension {L x W x H}	1334 x 825 x 1137 mm	
Flywheel housing	SAE 1 #	
Flywheel	14	
Number of teeth on flywheel	152	
Piston speed	7.5 m/s	9 m/s
ENGINE MOUNTING		
Max.Bending Moment at Rear Face to Block	1225 N.m	

INTAKE & EXHAUST SYSTEM

Engine Model	CE10A	CE10B
Max.Intake Restriction (kPa)	3.5	3.5
Max.Exhaust Back Pressure (kPa)	13	13
Combustion Air Consumption (m³/h)	1350	1512
Max.Exhaust Temp.(After Turbo°C)	590	590
Exhaust Gas Flow (m³/h)	3375	3780
Cooling fan are flow(m³/s)	7.99	10.05

COOLING SYSTEM
Water circulation by centrifugal pump on engine

Coolant capacity	42 L
Max.Permissible Temperature	105 °C
Max.Coolant warning Temperature	102 °C
Max.Coolant Shutdown Temperature	104 °C
Thermostat Open Temperature	85 °C start open; 95 °C full open
Max.external coolant system restriction	Cooling water pump inlet pressure > 30kpa

Two radiator options are provided, based on allowable maximum Air temperature On radiator inlet (Air On 40 °C) Air On 50 °C
- *ATB (Ambient Temperature before Boiling) of generator set varies depending on the engine room ventilation design, even if the same radiator applied. Adequate selection of radiator options by means of the cooling test is highly recommended, and generator set makers are responsible for the selection.*

FUEL SYSTEM
In-line pump with integrated, electromagnetic actuator

Engine Model	CE10A	CE10B
Governor	Common rail (Bosch's ECM)	
Speed drop	G2 Class (ISO 8528)	
Feed pump	Common rail	
Injection nozzle	Multi hole type	
Opening pressure	25 MPa	
Fuel filter	Full flow, Cartridge type with water drain valve	
Maximum fuel inlet restriction	65 kPa	
Maximum fuel return restriction	20 kPa	
Fuel feed pump Capacity	260 liters / hr	
Fuel	Diesel fuel	
Fuel Consumption of generator set		
Standby power- 100% load (l/h)	77.8	82.2
Prime Power - 100% load (l/h)	70.6	74.9
- 75% load (l/h)	52.9	56.2
- 50% load (l/h)	35.3	37.5
- 25% load (l/h)	17.6	18.7
Continous power - 100% load (l/h)	62.7	67.2
Lowest Fuel Consumption Ratio(g/kW.h)	201.0	203.0

CE10 Series Engine

LUBRICATION SYSTEM
Force-feed lubrication by gear pump, lubricating oil cooling water circuit of engine

	Force-feed lubrication by gear pump, lubricating oil cooling water circuit of engine
Lub.Method	Fully forced pressure feed type
Oil filter	Full flow, cartridge type
Lube oil specification	CH-4
Lube oil pressure	Min 150 kPa
Maximum oil temperature	120 °C
Max.Permissible Oil Temperature	116 °C
Oil Consumption (as % of fuel consumption)	≤0.1
Oil capacity	34.5 L

ELECTRICAL SYSTEM

Charging Alternator Voltage	28V
Charging Alternator Capacity	70A
Voltage regulator	Built-in type IC regulator
Starting motor	7.5kW
Battery Voltage	24V
Battery Capacity	2 x 150 Ah (recommended)
Starting aid (Option)	Block heater (Min. Temperature for Unaided Cold Start -10°C)

VALVE SYSTEM

Type	Overhead valve type	
Number of valve	Intake 2, exhaust 2 per cylinder	
Valve lashes at cold	Intake 0.4 mm, Exhaust 0.6 mm	
Valve timing		
	Opening	Closing
- Intake valve	12.2 deg.BTDC	14.4 deg.ABDC
- Exhaust valve	52.3 deg.BBDC	14.8 deg.ATDC

CE10 SERIES DIESEL ENGINE DRAWING

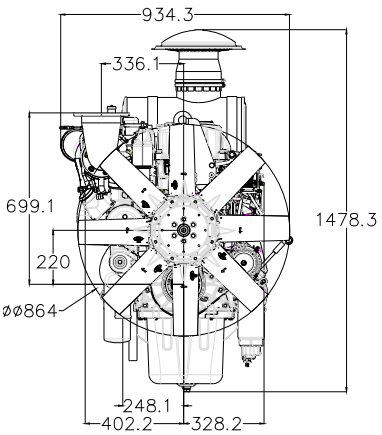

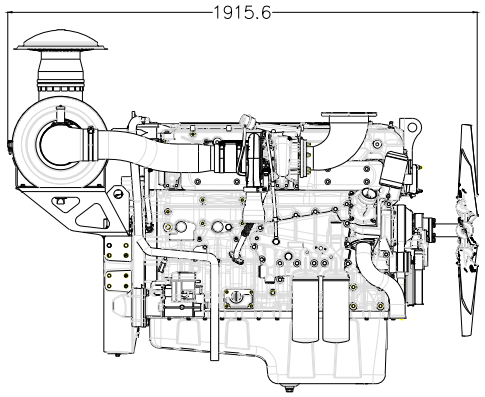

CE12 Series Engine

RATINGS DEFINITION

The power ratings of Emergency Standby and Prime are in accordance with the standard of IS08528. Fuel Stop power in accordance with the standard of ISO3046. Electric power (kW) should be estimated by considering generator efficiency, cooling fan power loss and power derating based on altitude and temperature.

STANDBY POWER RATING is applicable for supplying emergency power for the duration of the utility power outage. No overload capability is available for this rating. A standby rated engine should be sized for a maximum of 70% average load factor and 200 hours of operation per year, this includes less than 25 hours per year at the Standby Power rating.

PRIME POWER RATING is available for an unlimited of hours per year in variable load application. Variable load should not exceed 70% average the Prime Power rating during any operating period hours., The Total operating time at 100% Prime Power shall not exceed 500 hours per year.
10% overload capability is available for a period of 1 hour within a 12 hours period of operation. Total operating time at the 10% overload power shall not exceed 25 hours per year,

CONTINUOUS POWER RATING is the power that the engine can continue to use under the prescribed speed and the specific environment condition in the normal maintenance period stipulated in the manufacturing plant. Continuous power applicable for supplying utility power at a constant 100% for an unlimited number of hours per year. No overload capability is available for this rating.

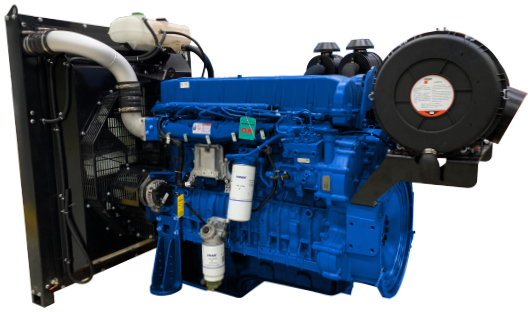

GENERAL ENGINE DATA

Engine Model	CE12A	CE12B
Engine Type	Line type 6 -Cylinder, Turbo charged & intercooled (air to air)	
Prime Power (kW/Ps)	355/483	355/483
Standby Power (kW/Ps)	390/530	390/530
Continuous Power (kW/Ps)	315/428	315/428
Speed	1500 rpm	1800 rpm
Bore x stroke	128 x 153 mm	
Displacement	11.81 L	
Compression ratio	17:1	
Rotation {Looking at flywheel}	Counter clockwise {CCW}	
Firing order	1-5-3-6-2-4	
Injection timing	4.5°±2.5° BTDC @ 1500 rpm	7.5°±3° BTDC@ 1800 rpm
Dry weight {W/O cooling system}	1065 kg	
Dimension {L x W x H}	1373 X 812 X 1138 mm	
Flywheel housing	SAE 1 #	
Flywheel	14	
Number of teeth on flywheel	143	
Piston speed	7.6 m/s	9.2 m/s

CE12 Series Engine

INTAKE & EXHAUST SYSTEM

Engine Model	CE12A	CE12B
Max.Intake Restriction (kPa)	3.5	3.5
Max.Exhaust Back Pressure (kPa)	15	15
Combustion Air Consumption (m³/h)	1710	1846
Max.Exhaust Temp.(After Turbo°C)	590	590
Exhaust Gas Flow (m³/h)	4050	4374
Cooling fan are flow(m³/s)	7.99	10.05

COOLING SYSTEM
Water circulation by centrifugal pump on engine

Coolant capacity	45 L
Max.Permissible Temperature	105 °C
Max.Coolant warning Temperature	102 °C
Max.Coolant Shutdown Temperature	104 °C
Thermostat Open Temperature	85 °C start open; 95 °C full open
Max.external coolant system restriction	Cooling water pump inlet pressure > 30kpa

Two radiator options are provided, based on allowable maximum Air temperature On radiator inlet (Air On 40 °C) Air On 50 °C

- *ATB (Ambient Temperature before Boiling) of generator set varies depending on the engine room ventilation design, even if the same radiator applied. Adequate selection of radiator options by means of the cooling test is highly recommended, and generator set makers are responsible for the selection.*

FUEL SYSTEM
In-line pump with integrated, electromagnetic actuator

Engine Model	CE12A	CE12B
Governor	Common rail (Bosch's ECM)	
Speed drop	G2 Class (ISO 8528)	
Feed pump	Common rail	
Injection nozzle	Multi hole type	
Opening pressure	25 MPa	
Fuel filter	Full flow, Cartridge type with water drain valve	
Maximum fuel inlet restriction	65 kPa	
Maximum fuel return restriction	20 kPa	
Fuel feed pump Capacity	260 liters / hr	
Fuel	Diesel fuel	
Fuel Consumption of generator set		
Standby power- 100% load (l/h)	94.0	89.0
Prime Power - 100% load (l/h)	85.0	80.0
- 75% load (l/h)	64.0	60.0
- 50% load (l/h)	43.0	40.0
- 25% load (l/h)	21.0	20.0
Continous power - 100% load (l/h)	76.0	72.0
Lowest Fuel Consumption Ratio(g/kW.h)	202.0	192.0

LUBRICATION SYSTEM
Force-feed lubrication by gear pump, lubricating oil cooling water circuit of engine

	Force-feed lubrication by gear pump, lubricating oil cooling water circuit of engine
Lub.Method	Fully forced pressure feed type
Oil filter	Full flow, cartridge type
Lube oil specification	CH-4
Lube oil pressure	Min 150 kPa
Maximum oil temperature	120 °C
Max.Permissible Oil Temperature	116 °C
Oil Consumption (as % of fuel consumption)	≤0.1
Oil capacity	38 L

ELECTRICAL SYSTEM

Charging Alternator Voltage	28V
Charging Alternator Capacity	70A
Voltage regulator	Built-in type IC regulator
Starting motor	7.5kW
Battery Voltage	24V
Battery Capacity	2 x 150 Ah (recommended)
Starting aid (Option)	Block heater (Min. Temperature for Unaided Cold Start -10°C)

VALVE SYSTEM

Type	Overhead valve type	
Number of valve	Intake 2, exhaust 2 per cylinder	
Valve lashes at cold	Intake 0.4 mm, Exhaust 0.65 mm	
Valve timing		
	Opening	Closing
- Intake valve	10.8 deg.BTDC	29.2 deg.ABDC
- Exhaust valve	49.7 deg.BBDC	11.3 deg.ATDC

CE12 SERIES DIESEL ENGINE DRAWING

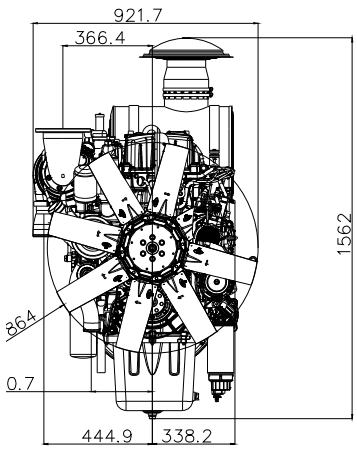

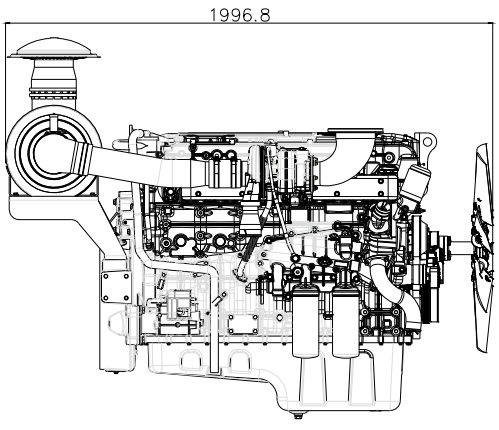

CE13 Series Engine

RATINGS DEFINITION

The power ratings of Emergency Standby and Prime are in accordance with the standard of IS08528. Fuel Stop power in accordance with the standard of ISO3046. Electric power (kW) should be estimated by considering generator efficiency, cooling fan power loss and power derating based on altitude and temperature.

STANDBY POWER RATING is applicable for supplying emergency power for the duration of the utility power outage. No overload capability is available for this rating. A standby rated engine should be sized for a maximum of 70% average load factor and 200 hours of operation per year, this includes less than 25 hours per year at the Standby Power rating.

PRIME POWER RATING is available for an unlimited of hours per year in variable load application. Variable load should not exceed 70% average the Prime Power rating during any operating period hours., The Total operating time at 100% Prime Power shall not exceed 500 hours per year.
10% overload capability is available for a period of 1 hour within a 12 hours period of operation. Total operating time at the 10% overload power shall not exceed 25 hours per year,

CONTINUOUS POWER RATING is the power that the engine can continue to use under the prescribed speed and the specific environment condition in the normal maintenance period stipulated in the manufacturing plant. Continuous power applicable for supplying utility power at a constant 100% for an unlimited number of hours per year. No overload capability is available for this rating.



GENERAL ENGINE DATA

Engine Model	CE13A	CE13AP	CE13B	CE13BP
Engine Type	Line type 6 -Cylinder, Turbo charged & intercooled (air to air)			
Prime Power (kW/Ps)	415/564	450/612	415/564	450/612
Standby Power (kW/Ps)	455/619	475/646	455/619	475/646
Continuous Power (kW/Ps)	370/503	450/612	370/503	450/612
Speed	1500 rpm		1800 rpm	
Bore x stroke	130 x 153 mm	130 x 161 mm	130 x 153 mm	130 x 161 mm
Displacement	12.8 L			
Compression ratio	17:1			
Rotation {Looking at flywheel}	Counter clockwise {CCW}			
Firing order	1-5-3-6-2-4			
Injection timing	4˚±3.5˚ BTDC @ 1500 rpm		10˚±1.5˚ BTDC@ 1800 rpm	
Dry weight {W/O cooling system}	1078 kg			
Dimension {L x W x H}	1432 x 972 x 1204 mm			
Flywheel housing	SAE 1 #			
Flywheel	14			
Number of teeth on flywheel	143			
Piston speed	8.1 m/s	8.06 m/s	9.7 m/s	9.66 m/s

INTAKE & EXHAUST SYSTEM

Engine Model	CE13A	CE13AP	CE13B	CE13BP
Max.Intake Restriction (kPa)	3.5	3.5	3.5	3.5
Max.Exhaust Back Pressure (kPa)	15	11	21	11
Combustion Air Consumption (m³/h)	1870	2050	2270	2489
Max.Exhaust Temp.(After Turbo°C)	590	566	590	575
Exhaust Gas Flow (m³/h)	4680	5100	5050	5405
Cooling fan are flow(m³/s)	8.89		11.18	

COOLING SYSTEM
Water circulation by centrifugal pump on engine

Coolant capacity	45 L
Max.Permissible Temperature	105 °C
Max.Coolant warning Temperature	102 °C
Max.Coolant Shutdown Temperature	104 °C
Thermostat Open Temperature	85 °C start open; 95 °C full open
Max.external coolant system restriction	Cooling water pump inlet pressure > 30kpa

Two radiator options are provided, based on allowable maximum Air temperature On radiator inlet (Air On 40 °C) Air On 50 °C
- *ATB (Ambient Temperature before Boiling) of generator set varies depending on the engine room ventilation design, even if the same radiator applied. Adequate selection of radiator options by means of the cooling test is highly recommended, and generator set makers are responsible for the selection.*

FUEL SYSTEM
In-line pump with integrated, electromagnetic actuator

Engine Model	CE13A	CE13AP	CE13B	CE13BP
Governor	Common rail (Bosch's ECM)			
Speed drop	G2 Class (ISO 8528)			
Feed pump	Common rail			
Injection nozzle	Multi hole type			
Opening pressure	25 MPa			
Fuel filter	Full flow, Cartridge type with water drain valve			
Maximum fuel inlet restriction	65 kPa			
Maximum fuel return restriction	20 kPa			
Fuel feed pump Capacity	260 liters / hr			
Fuel	Diesel fuel			
Fuel Consumption of generator set				
Standby power- 100% load (l/h)	106.0	109.0	111.0	115.0
Prime Power - 100% load (l/h)	97.0	102.0	101.0	109.0
- 75% load (l/h)	73.0	77.0	76.0	82.0
- 50% load (l/h)	48.0	51.0	50.0	55.0
- 25% load (l/h)	28.0	26.0	25.0	27.0
Continous power - 100% load (l/h)	86.0	102.0	90.0	109.0
Lowest Fuel Consumption Ratio(g/kW.h)	196.0	196.0	204.0	204.0

CE13 Series Engine

LUBRICATION SYSTEM
Force-feed lubrication by gear pump, lubricating oil cooling water circuit of engine

	Force-feed lubrication by gear pump, lubricating oil cooling water circuit of engine
Lub.Method	Fully forced pressure feed type
Oil filter	Full flow, cartridge type
Lube oil specification	CH-4
Lube oil pressure	Min 150 kPa
Maximum oil temperature	120 °C
Max.Permissible Oil Temperature	120 °C
Oil Consumption (as % of fuel consumption)	≤0.1
Oil capacity	41 L

ELECTRICAL SYSTEM

Charging Alternator Voltage	28V
Charging Alternator Capacity	70A
Voltage regulator	Built-in type IC regulator
Starting motor	7.5kW
Battery Voltage	24V
Battery Capacity	2 x 150 Ah (recommended)
Starting aid (Option)	Block heater (Min. Temperature for Unaided Cold Start -10°C)

VALVE SYSTEM

Type	Overhead valve type	
Number of valve	Intake 2, exhaust 2 per cylinder	
Valve lashes at cold	Intake 0.4 mm, Exhaust 0.65 mm	
Valve timing		
	Opening	Closing
- Intake valve	10.8 deg.BTDC	29.2 deg.ABDC
- Exhaust valve	49.7 deg.BBDC	11.3 deg.ATDC

CE13 SERIES DIESEL ENGINE DRAWING

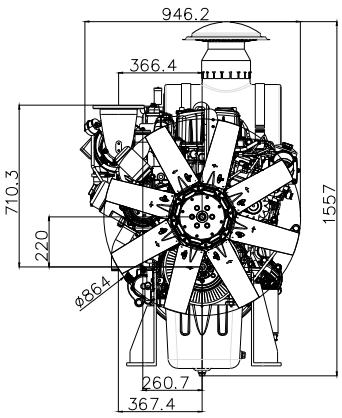

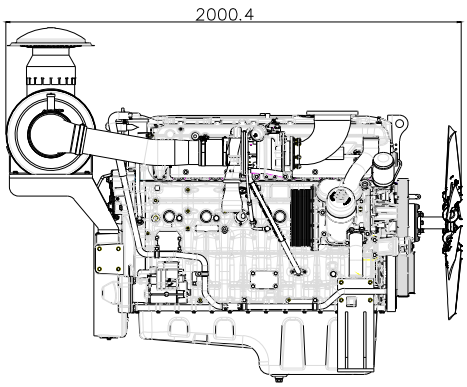

D Series Engine

The D Series Engine, VMAN imports advanced design and technology, production and management from Europe and the United States. The engine is in V-type and gets the technical feature of low compression-ratio and body structure reinforcing, which makes it much more reliable, powerful and lower noise.

The engine is easy to maintain and install and barely break down. The engine can always be used at the harsh climatic conditional regions of heat, cold and arid.Therefore, all these features make it the ideal power of generator, marine engine, auxiliary engine and various engineering machinery.

All series engines gets optimization of structural design by doing 3D modeling and having a finite element strength analysis, which makes diesel engines power get better improvement, at least 100kg lighter than other engines of the same power level.

Model	Type	Rate Speed	Standby Power	Prime Power	Displacement	Fuel Consumption (L/H)		Firing Sequence	Size	Flywheel
		(r/min)	(kW)	(kW)	(L)	0.75	1		(mm)	
D11A2	V6	1500	264	240	10.964	49.3	68.7	1-4-2-5-3-6	1251x1389x1288	SAE1#14
D11A1			292	265						
D11A			314	285						
D11			360	320						
D15A2	V8		363	330	14.618	69.6	97.1	1-5-7-2-6-3-4-8	1481x1389x1288	
D15A1			415	365						
D15A			445	405						
D15			500	450						
D22A3	V12		505	455	21.927	109.5	152.7	1-12-5-8-3-10-6-7-2-1 1-4-9	1717x1389x1288	SAE1#14
D22A2			565	515						
D22A			606	555						
D22			700	630						
D22Z			735	660						
D30A3	V16		780	705	29.235	145.5	202.9	1-15-6-12-8-5-16-7-1 1-4-9-2-14-10-3-13	2340x1392x1360	SAE0#18
D30A2			880	795						
D30A1			960	875						
D30A			1020	920						
D30AP			1100	1000						
DE40	V12	From 1000kW to 200kW diesel will be sale on the year of 2024								
DE80	V16									

D Series Engine



CHARACTERIS

- *High reliability*
- *Electronic speed*
- *Low noise/vibration*
- *Models of portable*
- *Low fuel consumption*
- *Emissions II*

Model	Type	Rate Speed	Standby Power	Prime Power	Displacement	Fuel Consumption (L/H)		Firing Sequence	Size	Flywheel
		(r/min)	(kW)	(kW)	(L)	0.75	1		(mm)	
D11B2	V6	1800	317	288	10.964	52.4	73.1	1-4-2-5-3-6	1251x1389x1288	SAE1#14
D11B1			340	318						
D11B			390	342						
D15B2	V8		405	370	14.618	78.2	109.1	1-5-7-2-6-3-4-8	1481x1389x1288	
D15B1			460	405						
D15B			500	440						
D15.1			560	500						
D22B3	V12		577	525	21.927	130.6	182.2	1-12-5-8-3-10-6-7-2-1 1-4-9	1717x1389x1288	SAE1#14
D22B2			627	565						
D22B1			682	620						
D22B			739	671						
D22.2			790	718						
D22.1			832	756						
D30B4	V16		850	750	29.235	150.2	209.5	1-15-6-12-8-5-16-7-1 1-4-9-2-14-10-3-13	2340x1392x1360	SAE0#18
D30B3			910	825						
D30B2			965	880						
D30B1			1020	920						
D30BP			1100	1000						
DE40	V12		From 1000kW to 2MW diesel will be sale on the year of 2023							
DE80	V16									

D Series Engine



RATINGS DEFINITION

The power ratings of Emergency Standby and Prime are in accordance with the standard of IS08528. Fuel Stop power in accordance with the standard of ISO3046.

Electric power (kW) should be estimated by considering generator efficiency, cooling fan power loss and power derating based on altitude and temperature.

STANDBY POWER RATING is applicable for supplying emergency power for the duration of the utility power outage. No overload capability is available for this rating. A standby rated engine should be sized for a maximum of 70% average load factor and 200 hours of operation per year, this includes less than 25 hours per year at the Standby Power rating.

PRIME POWER RATING is available for an unlimited of hours per year in variable load application. Variable load should not exceed 70% average the Prime Power rating during any operating period hours., The total operating time at 100% Prime Power shall not exceed 500 hours per year.

10% overload capability is available for a period of 1 hour within a 12 hours period of operation. Total operating time at the 10% overload power shall not exceed 25 hours per year,

CONTINUOUS POWER RATING is the power that the engine can continue to use under the prescribed speed and the specific environment condition in the normal maintenance period stipulated in the manufacturing plant. Continuous power applicable for supplying utility power at a constant 100% for an unlimited number of hours per year. No overload capability is available for this rating.

D11 Series Engine



Ratings (kW/PS)	1500rpm / 50Hz			
	D11	D11A	D11A1	D11A2
Prime	330/448	285/388	265/360	240/326
Standby	360/489	314/430	292/397	264/359
Continuous	240/326	217/295	201/273	182/247

Ratings (kW/PS)	1800rpm / 60Hz		
	D11B	D11B1	D11B2
Prime	342/465	318/432	288/392
Standby	390/530	340/462	317/431
Continuous	260/353	242/329	219/298

GENERAL ENGINE DATA

Engine Model	D11	D11A	D11A1	D11A2	D11B	D11B1	D11B2
Engine Type	4-Cycle, V-type, 6-Cylinder, Turbo charged & inter-cooled (air to air)						
Speed	1500 rpm				1800 rpm		
Bore x stroke	128 x 142 mm						
Displacement	10.964 L						
Compression ratio	14.6 : 1	15.5 : 1			14.6 : 1	15.5 : 1	
Rotation {Looking at flywheel}	Counter clockwise {CCW}						
Firing order	1-4-2-5-3-6						
Injection timing	18˚±1˚ BTDC @ 1500 rpm				20˚±1˚ BTDC @ 1800 rpm		
Dry weight {W/O cooling system}	904 kg						
Dimension {L x W x H}	1251x1389x1288 mm						
Flywheel housing	SAE 1						
Flywheel	14{PCD:438.15mm/17.25inch}						
Number of teeth on flywheel	160						
Piston speed	7.1 m/s				8.52 m/s		
ENGINE MOUNTING							
Max.Bending Moment at Rear Face to Block	1325 N.m						

INTAKE & EXHAUST SYSTEM

Engine Model	D11	D11A	D11A1	D11A2	D11B	D11B1	D11B2
Max.Intake Restriction (kPa)				5			
Max.Exhaust Back Pressure (kPa)				<10			
Combustion Air Consumption (m³/h)	2119	1820	1675	1507	2365	2042	1857
Max.Exhaust Temp.(After Turbo°C)	475	460	445	435	535	510	480
Exhaust Gas Flow (m³/h)	4885	4112	3707	3288	5890	5476	4960
Cooling fan air flow (m³/min)	675	675	675	675	810	810	810

ENGINE DATA WITH DRY EXHAUST MANIFOLD (STANDBY POWER)

Engine Model	D11	D11A	D11A1	D11A2	D11B	D11B1	D11B2
Cooling Water Circulation		320 L/min (1500 rpm)			390L/min (1800 rpm)		
Heat Rejection to Exhaust (kW)	278	242	219	197	314	266	246
Heat Rejection to Coolant (kW)	121	106	95	86	137	116	107
Heat Rejection to Intercooler (kW)	81	70	64	57	91	77	71
Radiated Heat to Ambient (kW)	37	32	21	18	60	41	35

ENGINE DATA WITH DRY EXHAUST MANIFOLD (PRIME POWER)

Engine Model	D11	D11A	D11A1	D11A2	D11B	D11B1	D11B2
Cooling Water Circulation		320 L/min (1500 rpm)			390L/min (1800 rpm)		
Heat Rejection to Exhaust (kW)	252	220	199	179	276	249	223
Heat Rejection to Coolant (kW)	110	96	87	78	120	109	97
Heat Rejection to Intercooler (kW)	73	64	58	52	80	72	65
Radiated Heat to Ambient (kW)	34	29	19	17	52	38	32

LUBRICATION SYSTEM

Force-feed lubrication by gear pump, lubricating oil cooling water circuit of engine

Lub.Method	Fully forced pressure feed type
Oil filter	Full flow, cartridge type
Lube oil specification	CF-4
Lube oil pressure	Idle Speed : Min 160 kPa
	Governed Speed: Min 200 kPa
Maximum oil temperature	110 °C
Max.Permissible Oil Temperature	90 °C
Oil Consumption (as % of fuel consumption)	≤0.5
Oil capacity	25 L

D11 Series Engine

COOLING SYSTEM
Water circulation by centrifugal pump on engine

Cooling method	Fresh water forced circulation
Coolant capacity	Engine 19L + Radiator 70L
Coolant flow rate	320 liters / min @1800 rpm, 390 liters / min @1500 rpm
Pressure Cap	49 kPa
Max.Permissible Temperature	90 °C
Max.Coolant warning Temperature	95 °C
Max.Coolant Shutdown Temperature	105 °C
Thermostat Open Temperature	71 °C
Max.external coolant system restriction	Not available

Two radiator options are provided, based on allowable maximum Air temperature On radiator inlet (Air On 40 °C) Air On 50 °C

- *ATB (Ambient Temperature before Boiling) of generator set varies depending on the engine room ventilation design, even if the same radiator applied. Adequate selection of radiator options by means of the cooling test is highly recommended, and generator set makers are responsible for the selection.*

AIR INDUCTION SYSTEM

Engine Model	D11	D11A	D11A1	D11A2	D11B	D11B1	D11B2
Maximum Intake Air Restriction							
- With Clean Filter Element (m³/h)	2119	1820	1675	1507	2365	2042	1857
- With Dirty Filter Element (m³/h)	6103	5242	4824	4340	6811	5881	5348
Max.static pressure after radiator (Pa)	955 Pa						

FUEL SYSTEM
In-line pump with integrated, electromagnetic actuator

Engine Model	D11	D11A	D11A1	D11A2	D11B	D11B1	D11B2
Governor	Electric type (Original GAC from USA)						
Speed drop	G2 Class (ISO 8528)						
Feed pump	Mechanical type in pump						
Injection nozzle	Multi hole type						
Opening pressure	28 MPa						
Fuel filter	Full flow, Cartridge type with water drain valve						
Maximum fuel inlet restriction	30 kPa						
Maximum fuel return restriction	60 kPa						
Fuel feed pump Capacity	630 liters / hr						
Fuel	Diesel fuel						
Fuel Consumption of generator set							
Standby power- 100% load (l/h)	89	77	70	63	101	85	79
Prime Power - 100% load (l/h)	78	68	63	57	87	79	71
- 75% load (l/h)	58	51	47	42	64	59	51
- 50% load (l/h)	39	34	33	30	44	40	36
- 25% load (l/h)	24	21	19	18	25	23	21
Continous power - 100% load (l/h)	59	52	41	43	66	60	54
Lowest Fuel Consumption Ratio(g/kW.h)	198	195	193	192	204	202	197

ELECTRICAL SYSTEM

Charging Alternator Voltage	28V
Charging Alternator Capacity	45A
Voltage regulator	Built-in type IC regulator
Starting motor	7kW
Battery Voltage	24V
Battery Capacity	2 x 200 Ah (recommended)
Starting aid (Option)	Block heater (Min. Temperature for Unaided Cold Start -10°C)

VALVE SYSTEM

Type	Overhead valve type	
Number of valve	Intake 1, exhaust 1 per cylinder	
Valve lashes at cold	Intake 0.3 mm, Exhaust 0.4 mm	
Valve timing		
	Opening	Close
- Intake valve	24 deg.BTDC	36 deg.ABDC
- Exhaust valve	63 deg.BBDC	27 deg.ATDC

D11 (V6) SERIES DIESEL ENGINE DRAWING

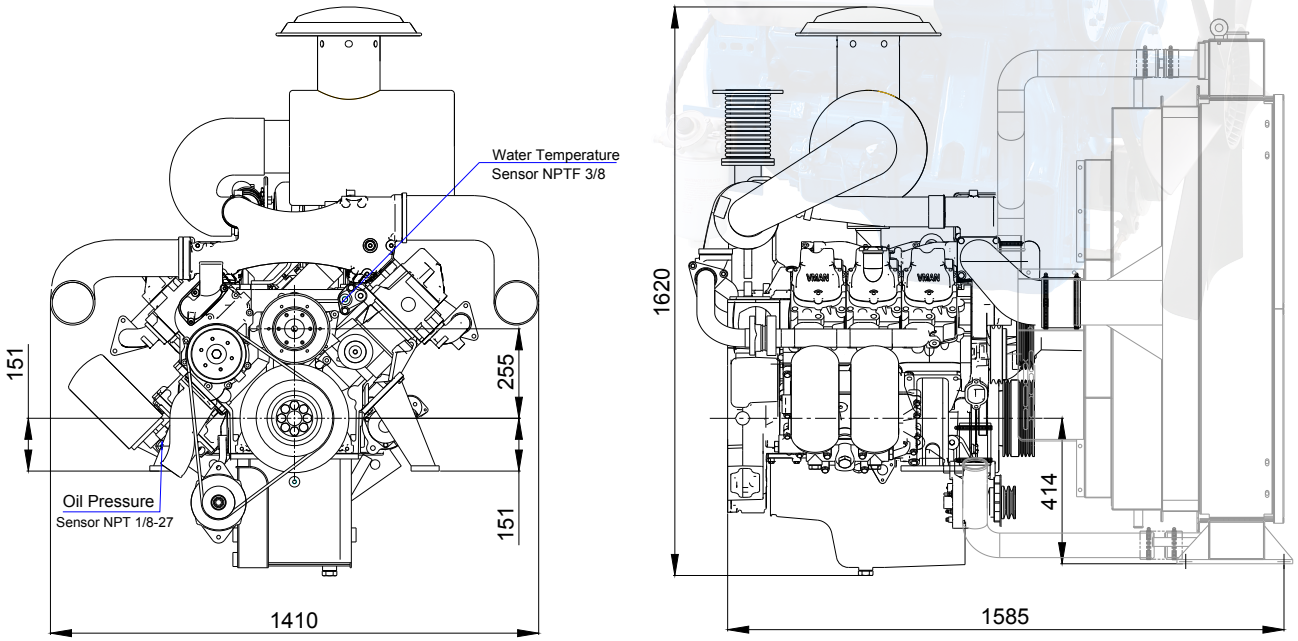

D15 Series Engine

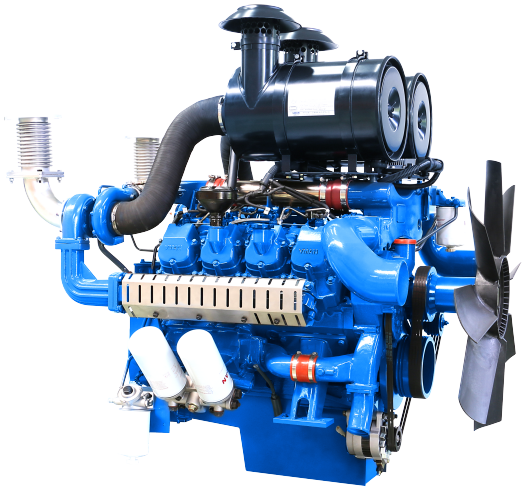

Ratings (kW/PS)	1500rpm / 50Hz			
	D15	D15A	D15A1	D15A2
Prime	450/612	405/551	365/496	330/450
Standby	500/680	445/605	415/565	363/494
Continuous	346/470	308/418	277/376	251/341

Ratings (kW/PS)	1800rpm / 60Hz		
	D15B	D15B1	D15B2
Prime	440/599	405/551	370/503
Standby	500/680	460/626	405/551
Continuous	334/454	308/418	281/382

GENERAL ENGINE DATA

Engine Model	D15	D15A	D15A1	D15A2	D15B	D15B1	D15B2
Engine Type	4-Cycle, V-type, 8-Cylinder, Turbo charged & inter-cooled (air to air)						
Speed	1500 rpm				1800 rpm		
Bore x stroke	128 x 142 mm						
Displacement	14.618 L						
Compression ratio	14.6 : 1	15.5 : 1			14.6 : 1	15.5 : 1	
Rotation {Looking at flywheel}	Counter clockwise {CCW}						
Firing order	1-5-7-2-6-3-4-8						
Injection timing	18°±1° BTDC @ 1500 rpm				20°±1° BTDC @ 1800 rpm		
Dry weight {W/O cooling system}	1050 kg						
Dimension {L x W x H}	1481 x1 389 x 1288 mm						
Flywheel housing	SAE 1						
Flywheel	14{PCD:438.15mm/17.25inch}						
Number of teeth on flywheel	160						
Piston speed	7.1 m/s				8.82 m/s		
ENGINE MOUNTING							
Max.Bending Moment at Rear Face to Block	1325 N.m						

INTAKE & EXHAUST SYSTEM

Engine Model	D15	D15A	D15A1	D15A2	D15B	D15B1	D15B2
Max.Intake Restriction (kPa)				5			
Max.Exhaust Back Pressure (kPa)				<10			
Combustion Air Consumption (m³/h)	3047	2699	2418	2137	3077	2749	2396
Max.Exhaust Temp.(After Turbo°C)	520	510	493	440	530	500	465
Exhaust Gas Flow (m³/h)	7447	6512	5709	4695	7615	6548	5449
Cooling fan air flow (m³/h/min)	713	713	675	675	810	810	810

ENGINE DATA WITH DRY EXHAUST MANIFOLD (STANDBY POWER)

Engine Model	D15	D15A	D15A1	D15A2	D15B	D15B1	D15B2
Cooling Water Circulation		590 L/min (1500 rpm)			660L/min (1800 rpm)		
Heat Rejection to Exhaust (kW)	396	353	319	276	411	358	318
Heat Rejection to Coolant (kW)	173	154	139	120	179	156	138
Heat Rejection to Intercooler (kW)	115	102	93	80	119	104	92
Radiated Heat to Ambient (kW)	63	56	51	44	66	57	51

ENGINE DATA WITH DRY EXHAUST MANIFOLD (PRIME POWER)

Engine Model	D15	D15A	D15A1	D15A2	D15B	D15B1	D15B2
Cooling Water Circulation		590 L/min (1500 rpm)			660L/min (1800 rpm)		
Heat Rejection to Exhaust (kW)	361	321	280	251	361	316	290
Heat Rejection to Coolant (kW)	157	140	122	109	157	138	126
Heat Rejection to Intercooler (kW)	105	93	81	73	105	92	84
Radiated Heat to Ambient (kW)	58	51	45	40	58	50	46

LUBRICATION SYSTEM

Force-feed lubrication by gear pump, lubricating oil cooling water circuit of engine

Lub.Method	Fully forced pressure feed type
Oil filter	Full flow, cartridge type
Lube oil specification	CF-4
Lube oil pressure	Idle Speed : Min 160 kPa
	Governed Speed: Min 200 kPa
Maximum oil temperature	110 °C
Max.Permissible Oil Temperature	90 °C
Oil Consumption (as % of fuel consumption)	≤0.5
Oil capacity	27 L

D15 Series Engine

COOLING SYSTEM
Water circulation by centrifugal pump on engine

Cooling method	Fresh water forced circulation
Coolant capacity	Engine 20L + Radiator 75L
Coolant flow rate	660 liters / min @1800 rpm, 590 liters / min @1500 rpm
Pressure Cap	49 kPa
Coolant Capacity for Engine	20 L
Max.Permissible Temperature	90 °C
Max.Coolant warning Temperature	95 °C
Max.Coolant Shutdown Temperature	105 °C
Thermostat Open Temperature	71 °C
Max.external coolant system restriction	Not available

Two radiator options are provided, based on allowable maximum Air temperature On radiator inlet (Air On 40 °C) Air On 50 °C

- *ATB (Ambient Temperature before Boiling) of generator set varies depending on the engine room ventilation design, even if the same radiator applied. Adequate selection of radiator options by means of the cooling test is highly recommended, and generator set makers are responsible for the selection.*

AIR INDUCTION SYSTEM

Engine Model	D15	D15A	D15A1	D15A2	D15B	D15B1	D15B2
Maximum Intake Air Restriction							
- With Clean Filter Element (m³/h)	3047	2697	2418	2137	3077	2749	2396
- With Dirty Filter Element (m³/h)	8775	7767	6964	6155	8862	7917	6900
Max.static pressure after radiator (Pa)	1126 Pa @ 1500rpm				955 Pa @ 1500rpm		

FUEL SYSTEM
In-line pump with integrated, electromagnetic actuator

Engine Model	D15	D15A	D15A1	D15A2	D15B	D15B1	D15B2
Governor	Electric type (Original GAC from USA)						
Speed drop	G2 Class (ISO 8528)						
Feed pump	Mechanical type in pump						
Injection nozzle	Multi hole type						
Opening pressure	28 MPa						
Fuel filter	Full flow, Cartridge type with water drain valve						
Maximum fuel inlet restriction	30 kPa						
Maximum fuel return restriction	60 kPa						
Fuel feed pump Capacity	630 liters / hr						
Fuel	Diesel fuel						
Fuel Consumption of generator set							
Standby power- 100% load (l/h)	127	113	102	88	131	115	102
Prime Power - 100% load (l/h)	113	101	89	90	114	100	91
- 75% load (l/h)	84	75	65	59	83	74	68
- 50% load (l/h)	57	51	46	41	57	50	45
- 25% load (l/h)	31	27	25	23	33	29	27
Continous power - 100% load (l/h)	86	77	67	61	86	76	69
Lowest Fuel Consumption Ratio(g/kW.h)	205	204	196	198	207	201	199

D15 Series Engine

ELECTRICAL SYSTEM

Charging Alternator Voltage	28V
Charging Alternator Capacity	45A
Voltage regulator	Built-in type IC regulator
Starting motor	7kW
Battery Voltage	24V
Battery Capacity	2 x 200 Ah (recommended)
Starting aid (Option)	Block heater (Min. Temperature for Unaided Cold Start -10°C)

VALVE SYSTEM

Type	Overhead valve type	
Number of valve	Intake 1, exhaust 1 per cylinder	
Valve lashes at cold	Intake 0.3 mm, Exhaust 0.4 mm	
Valve timing		
	Opening	Close
- Intake valve	24 deg.BTDC	36 deg.ABDC
- Exhaust valve	63 deg.BBDC	27 deg.ATDC

D15 (V8) Series diesel engine drawing

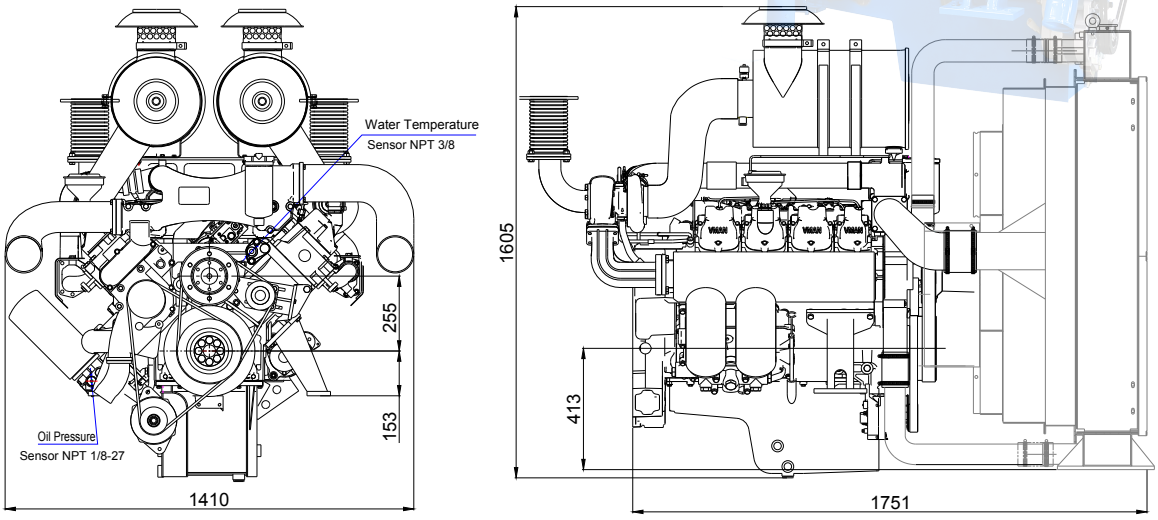

D22 Series Engine

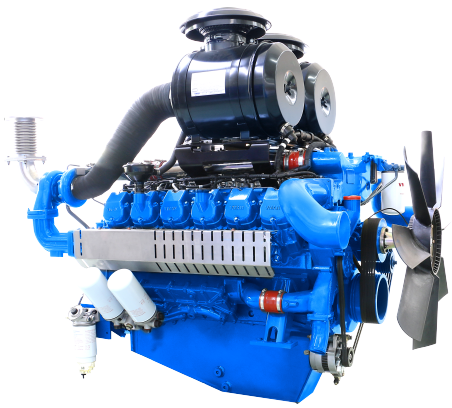

Ratings (kW/PS)	1500rpm / 50Hz				
	D22Z	D22	D22A	D22A2	D22A3
Prime	660/897	630/857	555/755	515/700	455/619
Standby	735/1000	700/952	606/824	565/768	505/687
Continuous	508/690	479/651	422/573	391/531	346/470

Ratings (kW/PS)	1800rpm / 60Hz					
	D22.1	D22.2	D22B	D22B1	D22B2	D22B3
Prime	756/1028	718/976	671/912	620/843	565/768	525/714
Standby	832/1131	790/1075	739/1005	682/927	627/853	577/785
Continuous	575/781	546/742	510/693	471/640	429/583	399/542

GENERAL ENGINE DATA

Engine Model	D22Z	D22	D22A	D22A2	D22A3	D22.1	D22.2	D22B	D22B1	D22B2	D22B3
Engine Type	4-Cycle, V-type, 12-Cylinder, Turbo charged & inter-cooled (air to air)										
Speed	1500 rpm					1800 rpm					
Bore x stroke	128 x 142 mm										
Displacement	21.927 L										
Compression ratio	14.6 : 1	15.5 : 1				14.6 : 1	15.5 : 1				
Rotation {Looking at flywheel}	Counter clockwise {CCW}										
Firing order	1-12-5-8-3-10-6-7-2-11-4-9										
Injection timing	18°±1° BTDC @ 1500 rpm					20°±1° BTDC @ 1800 rpm					
Dry weight {W/O cooling system}	1575 kg										
Dimension {L x W x H}	1717 x 1389 x 1288 mm										
Flywheel housing	SAE 1 or SAE 0										
Flywheel	14{PCD:438.15mm/17.25inch} or 18{PCD:543mm/31.38inch}										
Number of teeth on flywheel	150										
Piston speed	7.1 m/s					8.52 m/s					
ENGINE MOUNTING											
Max.Bending Moment at Rear Face to Block	1325 N.m										

INTAKE & EXHAUST SYSTEM

Engine Model	D22Z	D22	D22A	D22A2	D22A3	D22.1	D22.2	D22B	D22B1	D22B2	D22B3
Max.Intake Restriction (kPa)	5										
Max.Exhaust Back Pressure (kPa)	<10										
Combustion Air Consumption (m³/h)	4480	4204	3477	3309	2958	5710	4838	4504	4096	3728	3396
Max.Exhaust Temp.(After Turbo°C)	550	550	540	513	502	550	545	540	525	510	480
Exhaust Gas Flow (m³/h)	11361	10662	8712	8015	7064	13112	12197	11284	10072	8996	7882
Cooling fan air flow (m³/min)	863	863	750	720	720	1100	950	950	950	950	950

ENGINE DATA WITH DRY EXHAUST MANIFOLD (STANDBY POWER)

Engine Model	D22Z	D22	D22A	D22A2	D22A3	D22.1	D22.2	D22B	D22B1	D22B2	D22B3
Cooling Water Circulation	590 L/min @ 1500 rpm					660 L/min @ 1800 rpm					
Heat Rejection to Exhaust (kW)	578	551	475	431	378	684	646	604	548	493	452
Heat Rejection to Coolant (kW)	252	240	207	188	165	298	282	263	239	215	197
Heat Rejection to Intercooler (kW)	168	160	138	125	110	199	188	175	159	143	131
Radiated Heat to Ambient (kW)	92	88	76	69	60	109	103	97	88	79	72

ENGINE DATA WITH DRY EXHAUST MANIFOLD (PRIME POWER)

Engine Model	D22Z	D22	D22A	D22A2	D22A3	D22.1	D22.2	D22B	D22B1	D22B2	D22B3
Cooling Water Circulation	590 L/min @1500rpm					660 L/min @1800rpm					
Heat Rejection to Exhaust (kW)	526	496	435	393	341	621	587	549	498	444	411
Heat Rejection to Coolant (kW)	229	216	189	171	149	271	256	239	217	194	179
Heat Rejection to Intercooler (kW)	153	144	126	114	99	180	170	159	145	129	119
Radiated Heat to Ambient (kW)	84	79	69	63	54	99	94	88	80	71	66

LUBRICATION SYSTEM

Force-feed lubrication by gear pump, lubricating oil cooling water circuit of engine

Lub.Method	Fully forced pressure feed type
Oil filter	Full flow, cartridge type
Lube oil specification	CF-4
Lube oil pressure	Idle Speed : Min 160 kPa
	Governed Speed: Min 200 kPa
Maximum oil temperature	110 °C
Max.Permissible Oil Temperature	90 °C
Oil Consumption (as % of fuel consumption)	≤0.5
Oil capacity	57 L

D22 Series Engine

COOLING SYSTEM

Water circulation by centrifugal pump on engine

Cooling method	Fresh water forced circulation
Coolant capacity	Engine 23L + Radiator 96L
Coolant flow rate	660 liters/min @1800rpm； 590 liters/min @1500rpm
Pressure Cap	49 kPa
Max.Permissible Temperature	90 °C
Max.Coolant warning Temperature	95 °C
Max.Coolant Shutdown Temperature	105 °C
Thermostat Open Temperature	71 °C
Max.external coolant system restriction	Not available

Two radiator options are provided, based on allowable maximum Air temperature On radiator inlet (Air On 40 °C) Air On 50 °C

- *ATB (Ambient Temperature before Boiling) of generator set varies depending on the engine room ventilation design, even if the same radiator applied. Adequate selection of radiator options by means of the cooling test is highly recommended, and generator set makers are responsible for the selection.*

AIR INDUCTION SYSTEM

Engine Model	D22Z	D22	D22A	D22A2	D22A3	D22.1	D22.2	D22B	D22B1	D22B2	D22B3
Maximum Intake Air Restriction											
- With Clean Filter Element (m³/h)	4480	4204	3477	3309	2958	5170	4838	4504	4096	3728	3396
- With Dirty Filter Element (m³/h)	12902	12108	10014	9530	8519	14890	13933	12972	11796	10737	9780
Max.static pressure after radiator (Pa)	662 Pa @1500rpm					733 Pa @1800rpm					

FUEL SYSTEM

In-line pump with integrated, electromagnetic actuator

Engine Model	D22Z	D22	D22A	D22A2	D22A3	D22.1	D22.2	D22B	D22B1	D22B2	D22B3
Governor	Electric type (Original GAC from USA)										
Speed drop	G2 Class (ISO 8528)										
Feed pump	Mechanical type in pump										
Injection nozzle	Multi hole type										
Opening pressure	28 MPa										
Fuel filter	Full flow, Cartridge type with water drain valve										
Maximum fuel inlet restriction	30 kPa										
Maximum fuel return restriction	60kPa										
Fuel feed pump Capacity	630 liters / hr										
Fuel	Diesel fuel										
Fuel Consumption of generator set											
Standby power- 100% load (l/h)	185	176	152	138	121	219	207	193	175	158	145
Prime Power - 100% load (l/h)	167	157	133	124	109	197	186	174	158	140	130
- 75% load (l/h)	123	116	98	92	82	145	137	128	116	105	97
- 50% load (l/h)	83	79	66	63	56	104	98	91	83	74	68
- 25% load (l/h)	47	44	39	38	34	62	59	55	48	43	40
Continous power - 100% load (l/h)	127	120	101	94	83	150	142	132	120	107	99
Lowest Fuel Consumption Ratio(g/kW.h)	205	202	193	197	197	209	206	205	202	200	198

ELECTRICAL SYSTEM

Charging Alternator Voltage	28V
Charging Alternator Capacity	45A
Voltage regulator	Built-in type IC regulator
Starting motor	9kW
Battery Voltage	24V
Battery Capacity	2 x 250 Ah (recommended)
Starting aid (Option)	Block heater (Min. Temperature for Unaided Cold Start -10°C)

VALVE SYSTEM

Type	Overhead valve type	
Number of valve	Intake 1, exhaust 1 per cylinder	
Valve lashes at cold	Intake 0.3 mm, Exhaust 0.4 mm	
Valve timing		
	Opening	Close
- Intake valve	24 deg.BTDC	36 deg.ABDC
- Exhaust valve	63 deg.BBDC	27 deg.ATDC

D22 (V12) SERIES DIESEL ENGINE DRAWING

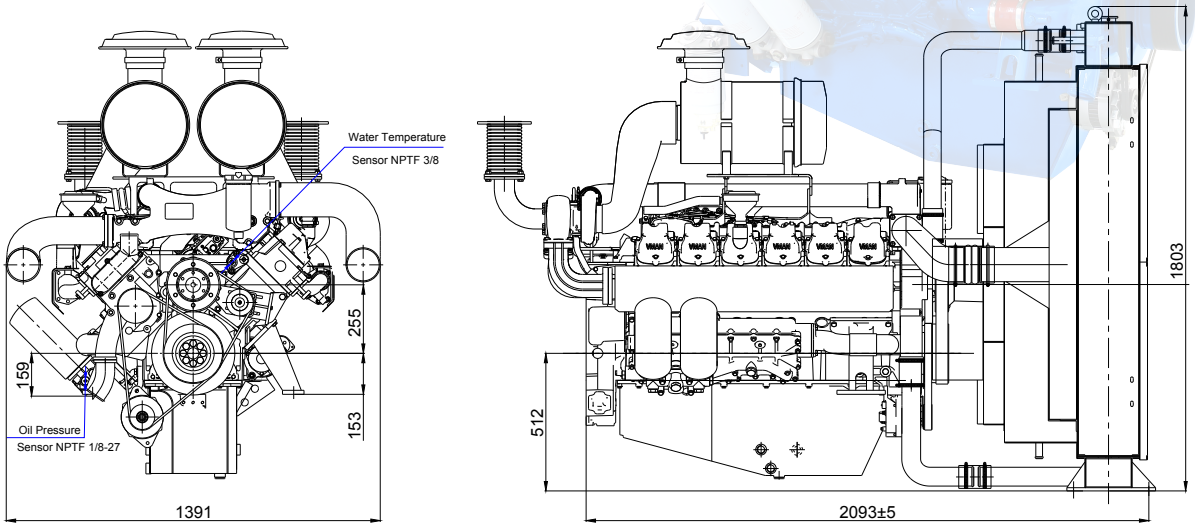

D30 Series Engine



Ratings (kW/PS)	1500rpm / 50Hz				
	D30AP	D30A	D30A1	D30A2	D30A3
Prime	1000/1360	920/1251	875/1190	795/1081	705/959
Standby	1100/1496	1020/1387	960/1305	880/1197	780/1061
Continuous	770/1047	707/961	665/904	604/821	536/729

Ratings (kW/PS)	1800rpm / 60Hz				
	D30BP	D30B1	D30B2	D30B3	D30B4
Prime	1000/1360	920/1251	880/1197	825/1122	750/1020
Standby	1100/1496	1020/1387	965/1312	910/1237	850/1156
Continuous	770/1047	707/961	675/918	637/866	578/786

GENERAL ENGINE DATA

Engine Model	D30AP	D30A	D30A1	D30A2	D30A3	D30BP	D30B1	D30B2	D30B3	D30B4
Engine Type	4-Cycle, V-type, 16-Cylinder, Turbo charged & inter-cooled (air to air)									
Speed	1500 rpm					1800 rpm				
Bore x stroke	128 x 142 mm									
Displacement	29.235 L									
Compression ratio	14.6 : 1		15.5 : 1			14.6 : 1		15.5 : 1		
Rotation {Looking at flywheel}	Counter clockwise {CCW}									
Firing order	1-15-6-12-8-5-16-7-11-4-9-2-14-10-3-13									
Injection timing	18˚±1˚ BTDC @ 1500 rpm					20˚±1˚ BTDC @ 1800 rpm				
Dry weight {W/O cooling system}	2100 kg									
Dimension {L x W x H}	2340 x1392 x 1360 mm									
Flywheel housing	SAE 0									
Flywheel	18{PCD:543mm/31.38inch}									
Number of teeth on flywheel	160									
Piston speed	7.1 m/s						8.52 m/s			
ENGINE MOUNTING										
Max.Bending Moment at Rear Face to Block	1325 N.m									

INTAKE & EXHAUST SYSTEM

Engine Model	D30AP	D30A	D30A1	D30A2	D30A3	D30BP	D30B1	D30B2	D30B3	D30B4
Max.Intake Restriction (kPa)	5									
Max.Exhaust Back Pressure (kPa)	<10									
Combustion Air Consumption (m³/h)	7115	6368	5651	5154	4591	7351	6580	5881	5330	4978
Max.Exhaust Temp.(After Turbo°C)	518	510	500	487	473	665	540	506	480	475
Exhaust Gas Flow (m³/h)	17461	15366	13462	12071	10556	18735	16487	14119	12368	11476
Cooling fan air flow (m³/h)	1755	1755	1755	1755	1365	1750	1750	1750	1400	1400

Engine Data with Dry Exhaust Manifold (Standby Power)

Engine Model	D30AP	D30A	D30A1	D30A2	D30A3	D30BP	D30B1	D30B2	D30B3	D30B4
Cooling Water Circulation	866 L/min (1500 rpm)						1040L/min (1800 rpm)			
Heat Rejection to Exhaust (kW)	898	839	773	701	614	916	856	782	685	644
Heat Rejection to Coolant (kW)	392	366	337	306	268	399	373	341	298	281
Heat Rejection to Intercooler (kW)	261	244	225	204	178	266	249	227	199	187
Radiated Heat to Ambient (kW)	143	134	124	112	98	147	137	125	109	103

Engine Data with Dry Exhaust Manifold (Prime Power)

Engine Model	D30AP	D30A	D30A1	D30A2	D30A3	D30BP	D30B1	D30B2	D30B3	D30B4
Cooling Water Circulation	866 L/min (1500 rpm)						1040L/min (1800 rpm)			
Heat Rejection to Exhaust (kW)	815	762	705	633	555	835	780	713	621	568
Heat Rejection to Coolant (kW)	355	332	307	276	242	364	340	311	271	248
Heat Rejection to Intercooler (kW)	236	221	205	184	161	243	227	207	180	165
Radiated Heat to Ambient (kW)	131	122	113	101	89	134	125	114	99	91

LUBRICATION SYSTEM

Force-feed lubrication by gear pump, lubricating oil cooling water circuit of engine

Lub.Method	Fully forced pressure feed type
Oil filter	Full flow, cartridge type
Lube oil specification	CF-4
Lube oil pressure	Idle Speed : Min 160 kPa
	Governed Speed: Min 200 kPa
Maximum oil temperature	110 °C
Max.Permissible Oil Temperature	90 °C
Oil Consumption (as % of fuel consumption)	≤0.5
Oil capacity	78 L

D30 Series Engine

COOLING SYSTEM
Water circulation by centrifugal pump on engine

Cooling method	Fresh water forced circulation
Coolant capacity	Engine 26L + Radiator 125L
Coolant flow rate	1040 liters / min @1800 rpm, 860 liters / min @1500 rpm
Pressure Cap	49 kPa
Coolant Capacity for Engine	26 L
Max.Permissible Temperature	90 °C
Max.Coolant warning Temperature	95 °C
Max.Coolant Shutdown Temperature	105 °C
Thermostat Open Temperature	71 °C
Max.external coolant system restriction	Not available

Two radiator options are provided, based on allowable maximum Air temperature On radiator inlet (Air On 40 °C) Air On 50 °C

- *ATB (Ambient Temperature before Boiling) of generator set varies depending on the engine room ventilation design, even if the same radiator applied. Adequate selection of radiator options by means of the cooling test is highly recommended, and generator set makers are responsible for the selection.*

AIR INDUCTION SYSTEM

Engine Model	D30AP	D30A	D30A1	D30A2	D30A3	D30B0	D30B1	D30B2	D30B3	D30B4
Maximum Intake Air Restriction										
- With Clean Filter Element (m³/h)	7115	6368	5651	5154	4591	7351	6580	5881	5330	4978
- With Dirty Filter Element (m³/h)	20491	18340	16275	14844	13222	21171	18950	16937	15350	14337
Max.static pressure after radiator (Pa)	1500 Pa @1500rpm					3000 Pa @1800rpm				

FUEL SYSTEM
In-line pump with integrated, electromagnetic actuator

Engine Model	D30AP	D30A	D30A1	D30A2	D30A3	D30BP	D30B1	D30B2	D30B3	D30B4
Governor	Electric type (HEINZMANN Speed governor)									
Speed drop	G2 Class (ISO 8528)									
Feed pump	Mechanical type in injpump									
Injection nozzle	Multi hole type									
Opening pressure	28 MPa									
Fuel filter	Full flow, Cartridge type with water drain valve									
Maximum fuel inlet restriction	30 kPa									
Maximum fuel return restriction	60 kPa									
Fuel feed pump Capacity										
Fuel	Diesel fuel									
Fuel Consumption of generator set										
Standby power- 100% load (l/h)	291	252	224	204	182	295	260	233	211	197
Prime Power - 100% load (l/h)	265	227	204	184	164	268	235	212	191	174
- 75% load (l/h)	199	170	153	138	123	201	176	159	143	130
- 50% load (l/h)	132	114	102	92	82	134	117	106	96	87
- 25% load (l/h)	66	57	51	46	41	67	59	53	48	43
Continous power - 100% load (l/h)	204	174	155	140	125	207	180	163	148	134
Lowest Fuel Consumption Ratio(g/kW.h)	225	210	198	197	198	228	217	205	197	197

ELECTRICAL SYSTEM

Charging Alternator Voltage	28V
Charging Alternator Capacity	45A
Voltage regulator	Built-in type IC regulator
Starting motor	11kW
Battery Voltage	24V
Battery Capacity	2 x 250 Ah (recommended)
Starting aid (Option)	Block heater (Min. Temperature for Unaided Cold Start -10°C)

VALVE SYSTEM

Type	Overhead valve type	
Number of valve	Intake 1, exhaust 1 per cylinder	
Valve lashes at cold	Intake 0.3 mm, Exhaust 0.4 mm	
Valve timing		
	Opening	Close
- Intake valve	24 deg.BTDC	36 deg.ABDC
- Exhaust valve	63 deg.BBDC	27 deg.ATDC

D30 (V16) SERIES DIESEL ENGINE DRAWING

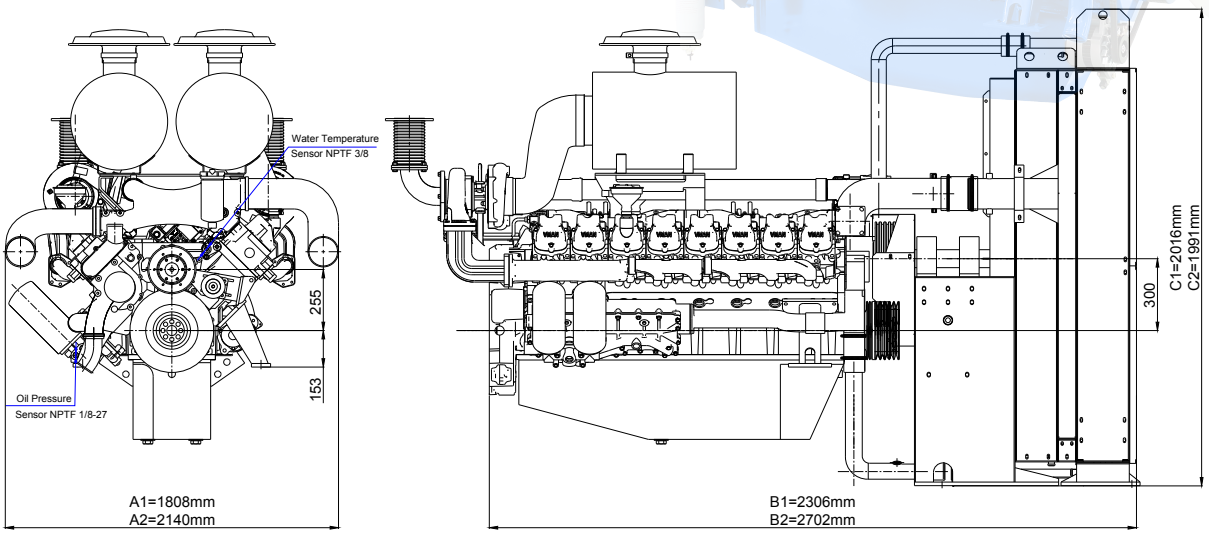

The size of A1 B1 C1 for D30A3 & D30B4
The size of A2 B2 C2 for D30AP D30A D30A1 D30A2 &D30BP D30B1 D30B2 D30B3

GAS Engine

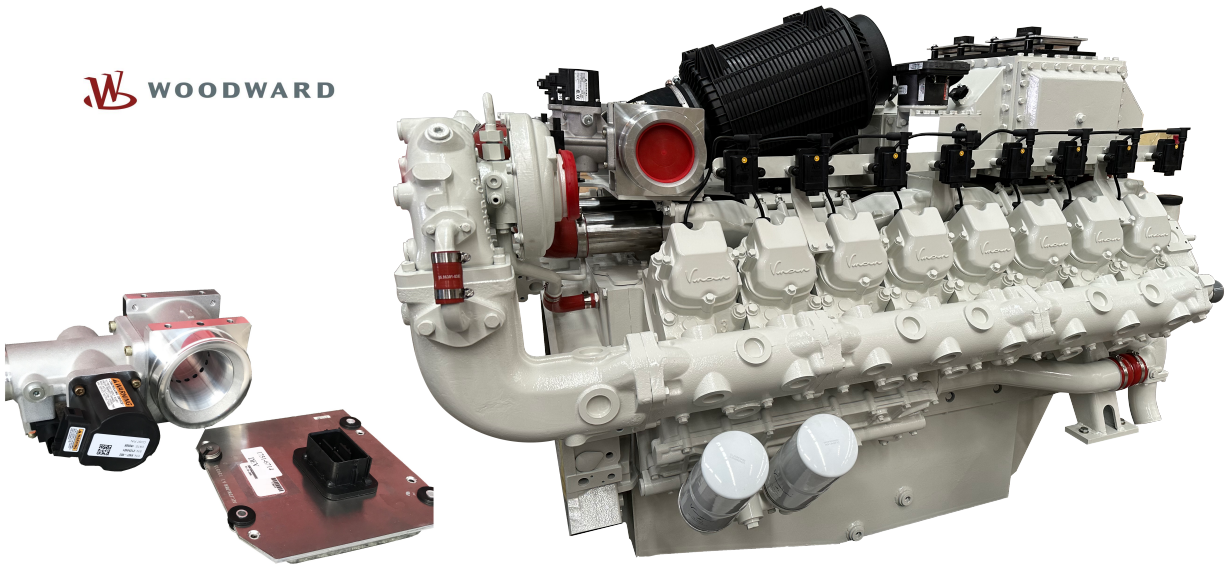

Model	Type	Speed (rpm)	Electrical power (kW)	Thermal output (kW)	Disp. (L)	Size (mm)	Flywheel
CET12A	L6	1500	200	221	11.81	1360 x 898 x 1138	SAE 1#14
CET13A	L6		250	271	12.80	1360 x 898 x 1138	
DT30A	V16		500	681	29.235	2340 x 1392 x 1360	
CET12B	L6	1800	200	221	11.81	1360 x 898 x 1138	SAE 1#14
CET13B	L6		250	271	12.80	1360 x 898 x 1138	
DT30B	V16		500	681	29.235	2340 x1392 x1360	

CET12/13 GAS Engine

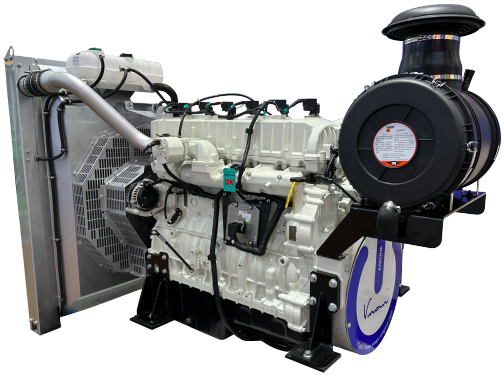

INTRODUCTION

CET series engine developed independently by VMAN is a classic product. It is characterized by energy-saving and environmental-friendly, excellent performance, compact structure, reliable and durable.The indexes, such as pollutant emission, dynamic performance, economy, and reliability, reach the international advanced level. The engine basically adopt new technology of Overhead camshaft. All main parts are imported.

Such as engine block, crankshaft, piston, Connecting rod, starting motor, bolt are all imported from Germany.Valve, turbocharger, charging alternator are all imported from U.S.A.

The engine design, component development, complete test validation came from AVL, AVL is a famous engine technology consulting company in the world, headquartered in Austria.

Ratings	1500rpm / 50Hz		1800rpm / 60Hz	
	CET12A	CET13A	CET12B	CET13B
Electrical power (kW)	200	250	200	250
Thermal output (kW)	221	271	221	271
Electrical efficiency	37.5%	38.4%	37.5%	38.4%
Thermal efficiency	41.5%	41.6%	41.5%	41.6%
Total efficiency	79%	80%	79%	80%

GENERAL ENGINE DATA

Engine Model	CET12A	CET12B	CET13A	CET13B
Engine Type	6 cylinder, Inline-type, Four- stroke			
Speed	1500 rpm			
Bore x stroke	128mm x 153mm			
Number of valve per cylinder	4			
Displacement	11.81 L	11.81 L	12.8 L	12.8 L
Compression ratio	11.5 : 1	11.5 : 1	11.5 : 1	11.5 : 1
Rotation {Looking at flywheel}	Anti-clockwise (facing the power delivery end)			
Firing order	1-5-3-6-2-4			
Cylinder distance	162 mm			
Combustion Type	W			
Controller system	Woodward PG+			
Outstanding dimistation	1360 x 898 x 1138 mm			
Engine Dry Weight	1065kg			
Rotational Inertia	2.9 kgm2			
Flywheel and flywheel housing	SAE 14” flywheel			
	SAE 1# flywheel housing			

CET12/13 GAS Engine

GAS CONSUMPTION CALCULATION

Engine Model	CET 12		CET 13	
Fuel	Nature Gas			
Fuel Consumption of generator set				
	kW	Nm3/h	kW	Nm3/h
100%	200	48	250	59
50%	100	27	125	33

-Standard reference conditions: ; Atmospheric pressure 100kPa, intake temperature 25°, relative humidity 50%. The deviation range of the data is +/-4%.

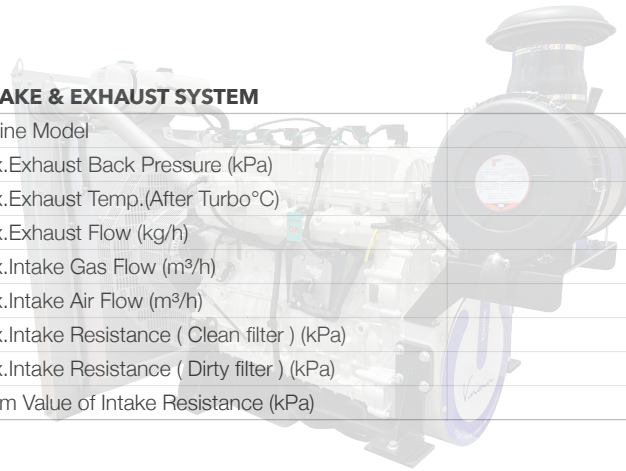

INTAKE & EXHAUST SYSTEM

Engine Model	CET12	CET13
Max.Exhaust Back Pressure (kPa)	10±1	10±1
Max.Exhaust Temp.(After Turbo°C)	670	680
Max.Exhaust Flow (kg/h)	1160	1450
Max.Intake Gas Flow (m³/h)	77	91
Max.Intake Air Flow (m³/h)	1010	1205
Max.Intake Resistance (Clean filter) (kPa)	3.5	3.5
Max.Intake Resistance (Dirty filter) (kPa)	6.5	6.5
Alarm Value of Intake Resistance (kPa)	6.3	6.3

COOLING SYSTEM

Coolant main content	50 : 50 (Ethylene Glycol, water)	50 : 50 (Ethylene Glycol, water)
Coolant outlet Temperature	95°C	95°C
Temperature Difference with inlet & outlet	6 ±1°C	6 ±1°C
Max.Coolant warning Temperature	104 °C	104 °C
Radiator Heat release	156 kW	192 kW
Radiator Flow	440L/min	440L/min
Intake air type	Air to air intercooler	Air to air intercooler
Intercooler allowance press drop	11 - 13 kPa	11 - 13 kPa
Intercooler Heat release	65 kW	79 kW
Intercooler allowance intake temperature	195 ±5°C	195 ±5°C
Max.Intercooler intake air	1450 kg/h	1450 kg/h

LUBRICATION SYSTEM

Lube oil pressure @ idle speed	Min 100 ±10 kPa	Min 100 ±10 kPa
Lube oil pressure @ rated speed	550±10 kPa	550±10 kPa
Max.Permissible Oil Temperature	≤120 °C	≤120 °C
Oil capacity Lowest	30 L	30 L
Oil capacity Highest	38 L	38 L
Oil capacity	33.2-41.6 L	33.2-41.6 L
Oil capacity allowance dip angle	30°C	30°C

ELECTRICAL SYSTEM

Charging Alternator Voltage	24V	24V
Unaided Cold Start Average Start Speed	130 r/min	130 r/min
Starting aid (Option)	Block heater (Min. Temperature for Unaided)	Block heater (Min. Temperature for Unaided)

EXHAUST

Item	CET12(Value)	CET13(Value)
CH_4	1069.5 ppm	1069.5 ppm
O_2	≤5%	≤5%
N_2	80%-83%(Standard values)	80%-83%(Standard values)
CO_2	70654.63 ppm	70654.63 ppm
NO_x	208.4 ppm	208.4 ppm
SO_2	From your natural gas	From your natural gas
CO	705 ppm	705 ppm
DUST	From your local air	From your local air

CET SERIES GAS ENGINE DRAWING

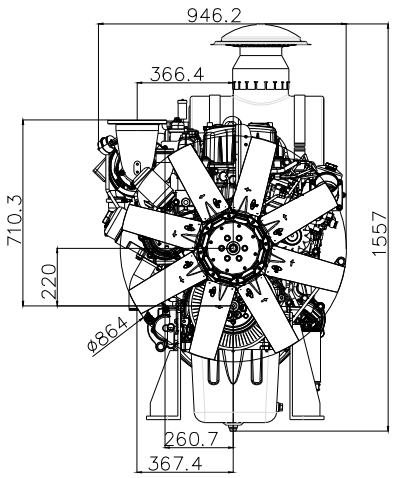

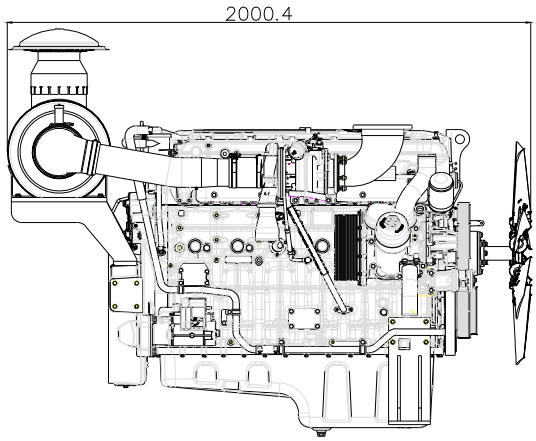

DT30 GAS Engine

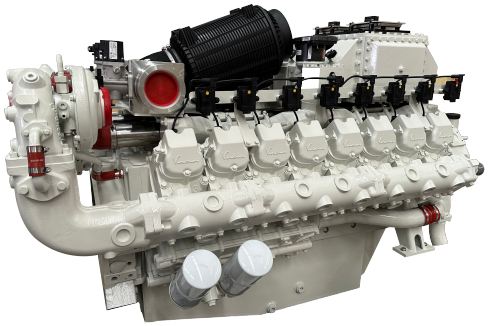

INTRODUCTION

The VMAN DT30 series is a European Union CE-certified natural gas engine developed from the block up to be a reliable and durable power unit. Built upon a proven European diesel grade block, the 6-cylinders V-configuration, turbocharged and after-cooled engine features replaceable wet liners and water-cooled exhaust.

Superior engine performance is driven by Woodward control system, ECU that integrates and coordinates all critical functions including: governor, Variable ignition timing, Air fuel ratio control, Knock suppression and engine protection.

Ratings	1500rpm / 50Hz	1800rpm / 60Hz
	DT30A	DT30B
Electrical power (kW)	500	500
Thermal output (kW)	681	681
Electrical efficiency	36%	36%
Thermal efficiency	49%	49%
Total efficiency	85%	85%

GENERAL ENGINE DATA

Engine Model	DT30A	DT30B
Engine Type	16 cylinder, Inline-type, Four- stroke	
Speed	1500 rpm	
Bore x stroke	128 x 142 mm	
Number of valve per cylinder	2	
Displacement	29.235 L	
Compression ratio	12.5 : 1	12.5 : 1
Rotation {Looking at flywheel}	Counter clockwise {CCW}	
Firing order	1-15-6-12-8-5-16-7-11-4-9-2-14-10-3-13	
Combustion Type	W	
Controller system	Woodward PG+	
Outstanding dimistation	1887 x 1120 x 1362 mm	
Engine Dry Weight	2100 kg	
Rotational Inertia	2.9 kgm2	
Flywheel and flywheel housing	SAE 14” flywheel	
	SAE 1# flywheel housing	

GAS CONSUMPTION CALCULATION

Engine Model	DT30A		DT30B	
Fuel	Nature Gas			
Fuel Consumption of generator set				
	kW	Nm3/h	kW	Nm3/h
100%	500	126	500	126
50%	250	69	250	69

-Standard reference conditions: ; Atmospheric pressure 100kPa, intake temperature 25°, relative humidity 50%. The deviation range of the data is +/-4%.

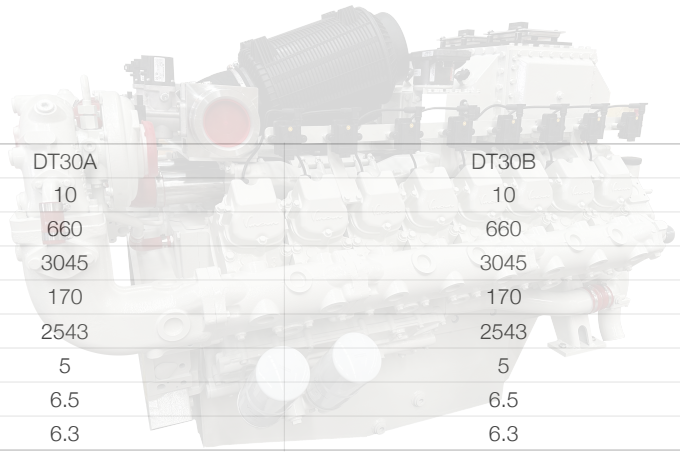

INTAKE & EXHAUST SYSTEM

Engine Model	DT30A	DT30B
Max.Exhaust Back Pressure (kPa)	10	10
Max.Exhaust Temp.(After Turbo°C)	660	660
Max.Exhaust Flow (kg/h)	3045	3045
Max.Intake Gas Flow (m³/h)	170	170
Max.Intake Air Flow (m³/h)	2543	2543
Max.Intake Resistance (Clean filter) (kPa)	5	5
Max.Intake Resistance (Dirty filter) (kPa)	6.5	6.5
Alarm Value of Intake Resistance (kPa)	6.3	6.3

COOLING SYSTEM

Coolant main content	50 : 50 (Ethylene Glycol, water)	50 : 50 (Ethylene Glycol, water)
Coolant outlet Temperature	95°C	95°C
Temperature Difference with inlet & outlet	9 ±1°C	9 ±1°C
Max.Coolant warning Temperature	97 °C	97 °C
Radiator Heat release	477 kW	477 kW
Radiator Flow	1040L/min	1040L/min
Intake air type	Air to air intercooler	Air to air intercooler
Intercooler allowance press drop	11 - 13 kPa	11 - 13 kPa
Intercooler Heat release	204 kW	204 kW
Intercooler allowance intake temperature	195 ±5°C	195 ±5°C
Max.Intercooler intake air	3280 kg/h	3280 kg/h

DT30 GAS Engine

LUBRICATION SYSTEM

Lube oil pressure @ idle speed	Min 160 ±10 kPa	Min 160 ±10 kPa
Lube oil pressure @ rated speed	450±10 kPa	450±10 kPa
Max.Permissible Oil Temperature	≤110 °C	≤110 °C
Oil capacity Lowest	65 L	65 L
Oil capacity Highest	78 L	78 L
Oil capacity	65-70 L	65-70 L
Oil capacity allowance dip angle	30°C	30°C

ELECTRICAL SYSTEM

Charging Alternator Voltage	24V	24V
Unaided Cold Start Average Start Speed	130 r/min	130 r/min
Starting aid (Option)	Block heater (Min. Temperature for Unaided)	Block heater (Min. Temperature for Unaided)

EXHAUST

Item	DT30A(Value)	DT30B(Value)
CH_4	1069.5 ppm	1069.5 ppm
O_2	≤5%	≤5%
N_2	80%-83%(Standard values)	80%-83%(Standard values)
CO_2	70654.63 ppm	70654.63 ppm
NO_x	208.4 ppm	208.4 ppm
SO_2	From your natural gas	From your natural gas
CO	705 ppm	705 ppm
DUST	From your local air	From your local air

DT30 SERIES GAS ENGINE DRAWING

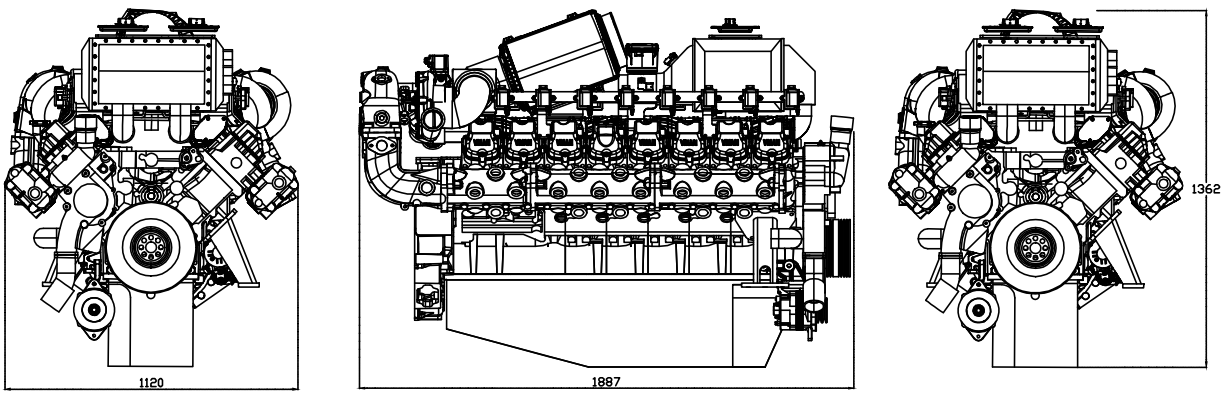

Marine Engine



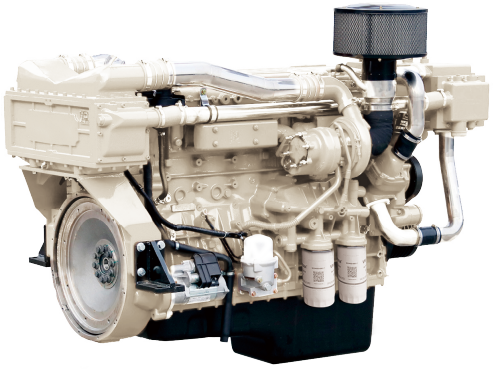

Model	Type	Speed (rpm)	Power (HP)	Power (kW)	Disp. (L)	Size (mm)	Applications
CE12C1	L6	1500	426	318	11.8	1780 x 984 x1388	Marine Auxiliary Engines
CE12C2		1800	430	321			
CE13C1	L6	1500	547	408	12.8	1360 x 898 x 1138	
CE13C2		1800	548	409			
D15C1	V 8	1500	412	307	14.6	1650 x 1230 x 1324	
D15C2		1800	480	358			
D22C1	V12	1500	605	451	21.9	1941 x 1230 x 1325	
D22C2		1800	717	535			
D30C1	V16	1500	805	600	29.2	2340 x 1230 x 1410	
D30C2		1800	959	715			
CE12D	L6	1800	430	321	11.8	1780 x 984 x1388	Marine Propulsion Engines
CE13D	L6	1800	548	409	12.8	1360 x 898 x 1138	
D15D	V8	1800	480	358	14.6	1650 x 1230 x 1324	
D22D	V12	1800	717	535	21.9	1941 x 1230 x 1325	
D30D	V16	1800	959	715	29.2	2340 x 1230 x 1410	

Marine Propulsion Engine OF D SERIES

Model	Type	Speed (rpm)	Power (HP)	Power (kW)	Disp. (L)
D15D	V8	1800	480	358	14.6
D22D	V12	1800	717	535	21.9
D30D	V16	1800	959	715	29.2



Note:

1. *No reduction in rating for intake air temperature is up to 45°C (318K) and sea water temperature is up to 32 °C (305K) , relative humidity is up to 60 % all data are based on operation to ISO 3046;*
2. *Operation hours are unlimited per year, at average load is up to 90 %, at full load is up to 80 %;*
3. *Typical gearbox ratio: 2.5 ~ 6 (Fishing trawler, Tug boat, Pushing vessel, Cargo boat, Freighter, Ferry).*

D SERIES PROPULSION ENGINE SPECIFICATION

Engine Model	D15D	D22D	D30D
Engine Type	4 cycle,direct- injection, water cooled with wet turbo charger & inter-cooler		
	V8 type	V12 type	V16 type
Rating output (kW/rpm)	358/1800	535/1800	715/1800
Rating output (HP/rpm)	480/1800	717/1800	959/1800
Displacement (L)	14.618	21.927	29.235
Cylinder number - bore(Φ) x stroke (mm)	8- Φ128 x 142	12- Φ128 x 142	16- Φ128 x 142
Valve clearance at cold - In / Ex (mm)	0.3 / 0.4	0.3 / 0.4	0.3 / 0.4
Low idling (rpm)	725 ± 25		
No load max. (rpm)	<2070		
Mean effective pressure (kg/cm2)	16.4	16.3	16.3
Mean piston speed (m/sec)	8.52		
Compression ratio	15.5 : 1		
Firing order	1-5-7-2-6-3-4-8	1-12-5-8-3-10-6-7-2-11-4-9	1-15-6-12-8-5-16-7-11-4-9-2 -14-10-3-13
Governor type of injection pump	Mechanical pump with GAC6500 electronic variable speed controller		
Fuel consumption (g/kW.h)	200	202	204
Fuel consumption (Lit./h)	84	127	172
Injection timing (B.T.D.C)	20 °± 1°		

Marine Propulsion Engine OF D SERIES

D SERIES PROPULSION ENGINE SPECIFICATION

Engine Model	D15D	D22D	D30D
Starting system	Electric Starting by starter motor		
Starter motor capacity (V - kW)	24-7	24-9	24-11
Alternator capacity (V - A)	24-45		
Battery (V - Ah)	24-200	24-400	24-500
Cooling system	Indirect sea water cooling with heat exchanger		
Cooling water capacity - Max. / Min (lit.)	89/78	98/87	107/96
Fresh water pump type	Centrifugal type, driven by belt		
Sea water pump type	Bronze impeller type driven by belt		
Lubricating oil - pan capacity (lit.)	Max:27, Min:19	Max:57, Min:41	Max:78, Min:60
Lubricating oil - pressure (kg/cm2)	Full : 3.5; Idle : 1.2		
Direction of revolution - crankshaft	Counter clockwise viewed from stern side		
Engine Size (L x W x H) (mm)	1656x1230x1324	1941x1230x1325	2340x1230x1410
Engine dry weight (kg)	1350	1750	2100

D SERIES PROPULSION ENGINE DRAWING

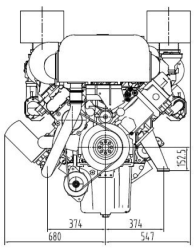

D15/22/30D

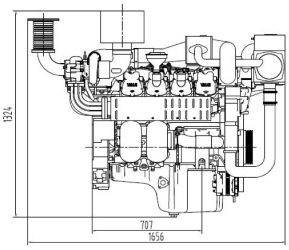

D15D

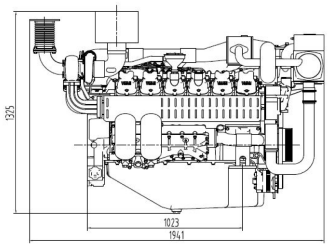

D22D

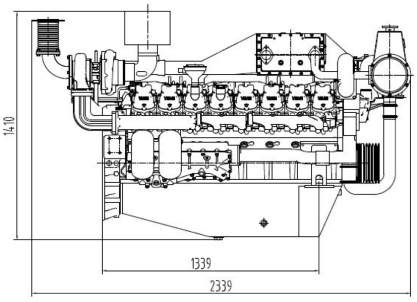

D30D

Marine Propulsion Engine OF C Series

Model	Type	Speed (rpm)	Power (HP)	Power (kW)	Disp. (L)
CE12D	L6	1800	430	321	11.8
CE13D	L6	1800	548	409	12.8

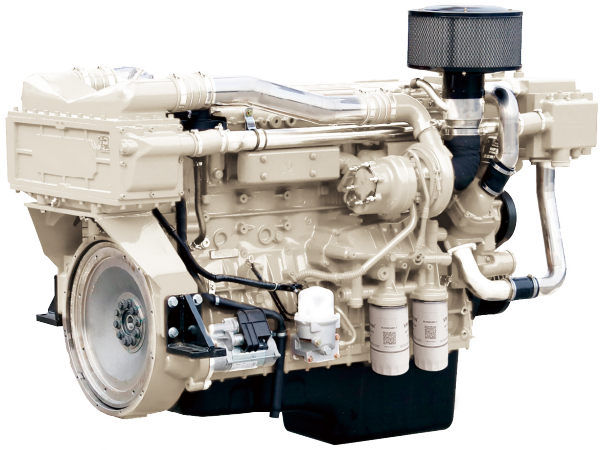

Note:

1. *No reduction in rating for intake air temperature is up to 45°C (318K) and sea water temperature is up to 32 °C (305K) , relative humidity is up to 60 % all data are based on operation to ISO 3046;*
2. *Operation hours are unlimited per year, at average load is up to 90 %, at full load is up to 80 %;*
3. *Typical gearbox ratio: 2.5 ~ 6 (Fishing trawler, Tug boat, Pushing vessel, Cargo boat, Freighter, Ferry).*

CE SERIES PROPULSION ENGINE SPECIFICATION

Engine Model	CE12D	CE13D
Engine Type	4 cycle,direct- injection, water cooled with wet turbo charger & inter-cooler	
	L6 type	L6 type
Rating output (kW/rpm)	321/1800	409/1800
Rating output (HP/rpm)	430/1800	548/1800
Displacement (L)	11.8	12.8
Cylinder number - bore(Φ) x stroke (mm)	6- Φ128 x 153	16- Φ130 x 161
Valve clearance at cold - In / Ex (mm)	0.4 / 0.65	0.4 / 0.65
Low idling (rpm)	650 ± 25	
No load max. (rpm)	<1858	
Mean effective pressure (kg/cm2)	20.2	21.7
Mean piston speed (m/sec)	9.2	9.66
Compression ratio	17 : 1	
Firing order	1-5-3-6-2-4	
Governor type of injection pump	Common rail with ECU	
Fuel consumption (g/kW.h)	190	190
Fuel consumption (Lit./h)	72	176
Injection timing (B.T.D.C)	7.5 °± 3°	10 °± 1.5°

Marine Propulsion Engine OF C Series

CE SERIES PROPULSION ENGINE SPECIFICATION

Engine Model	CE12D	CE13D
Starting system	Electric Starting by starter motor	
Starter motor capacity (V - kW)	24-7.5	
Alternator capacity (V - A)	24-70	
Battery (V - Ah)	24-150	
Cooling system	Indirect sea water cooling with heat exchanger	
Cooling water capacity - Max. / Min (lit.)	45/40	
Fresh water pump type	Centrifugal type, driven by belt	
Sea water pump type	Bronze impeller type driven by belt	
Lubricating oil - pan capacity (lit.)	Max:37, Min:33	Max:41, Min:38
Lubricating oil - pressure (kg/cm2)	Full : 5.6; Idle : 1.57	
Direction of revolution - crankshaft	Counter clockwise viewed from stern side	
Engine Size (L x W x H) (mm)	1780 x984 x1549	1780 x1014 x1510
Engine dry weight (kg)	1265	1170

D SERIES PROPULSION ENGINE DRAWING

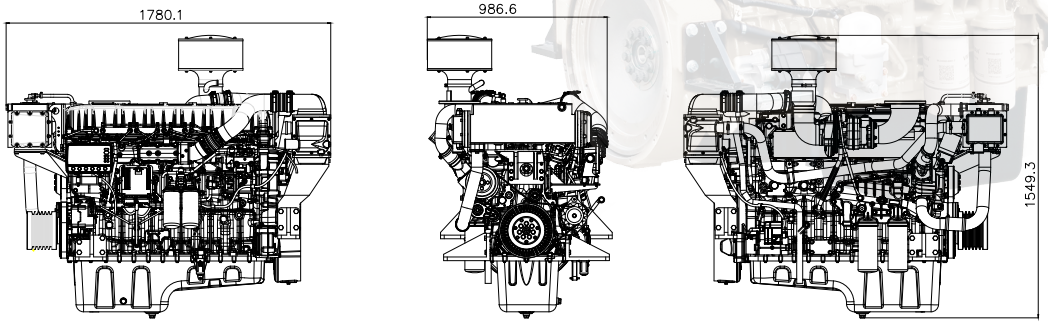

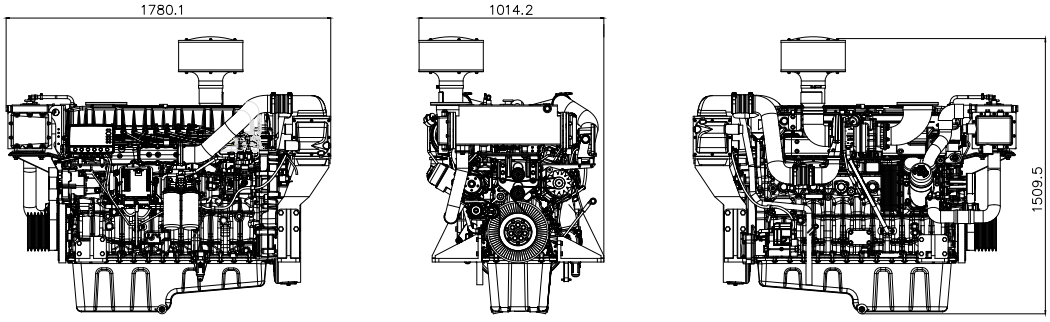

Marine Auxiliary Engine Of D Series

Model	Type	Speed (rpm)	Power (HP)	Power (kW)	Disp. (L)
D15C1	V 8	1500	412	307	14.6
D15C2		1800	480	358	
D22C1	V12	1500	605	451	21.9
D22C2		1800	717	535	
D30C1	V16	1500	805	600	29.2
D30C2		1800	959	715	



Note:

1. *No reduction in rating for intake air temperature is up to 45°C (318K) and sea water temperature is up to 32 °C (305K) , relative humidity is up to 60 % all data are based on operation to ISO 3046;*
2. *Operation hours are unlimited per year, at average load is up to 90 %, at full load is up to 80 %;*

D SERIES MARINE AUXILIARY ENGINE SPECIFICATION

Engine Model		D15C1	D15C2	D22C1	D22C2	D30C1	D30C2
Engine Type		4 cycle, V-type, direct- injection, water cooled with turbo charger&inter-cooler					
Rating output	kW/rpm	307/1500	358/1800	451/1500	535/1800	600/1500	715/1800
Rating output	PS/rpm	418/1500	486/1800	613/1500	727/1800	816/1500	972/1800
Displacement	cc	14.618		21.927		29.235	
Cylinder number - bore(Φ) x stroke	mm	8- Φ128 x 142		12- Φ128 x 142		16- Φ128 x 142	
Valve clearance at cold - In / Ex	mm	0.3 / 0.4					
Low idling rpm	rpm	800 ±50					
No load max. rpm	rpm	1500	1800	1500	1800	1500	1800
Mean effective pressure	kg/cm2	16.8	16.3	16.5	16.3	16.4	16.3
Mean piston speed	m/sec	7.1	8.52	7.1	8.52	7.1	8.52
Compression ratio		15.5 : 1					
Governor type of injection pump		Electric Governor					

Marine Auxiliary Engine Of D Series

D SERIES MARINE AUXILIARY ENGINE SPECIFICATION

Engine Model		D15C1	D15C2	D22C1	D22C2	D30C1	D30C2
Fuel consumption	g/kW.h	204	208	207	209	208	211
	Lit/h	76	90	113	135	150	182
Injection timing (B.T.D.C)	deg	14 °± 1°	14 °± 1°	16°± 1°	16°± 1°	16°± 1°	16°± 1°
Starting system		Electric Starting by starter motor					
Starter motor capacity	V - kW	24-7		24-9		24-11	
Alternator capacity	V - A	24-45					
Battery	V - Ah	24-200		24-400		24-500	
Cooling system		In direct sea water cooling with heat exchanger					
Cooling water capacity - Max. / Min	lit.	89/78		98/87		107/96	
Fresh water pump type		Centrifugal type, driven by belt					
Sea water pump type		Bronze impeller type driven by belt					
Lubricating oil - pan capacity	lit.	Max:27, Min:19		Max:57, Min:41		Max:78, Min:60	
Lubricating oil - pressure	kg/cm2	Full : 3.5, Idle : 1.2					
Direction of revolution - crankshaft		Counter clockwise viewed from stern side					
Engine Size (L x W x H)	mm	1656 x 1230 x 1324		1941 x 1230 x 1325		2340 x 1230 x 1410	
Engine dry weight	kg	1350		1750		2100	

D SERIES MARINE AUXILIARY ENGINE DRAWING

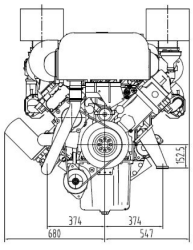

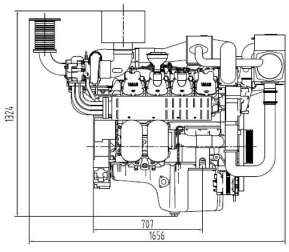

D15C

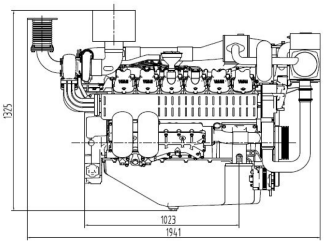

D22C

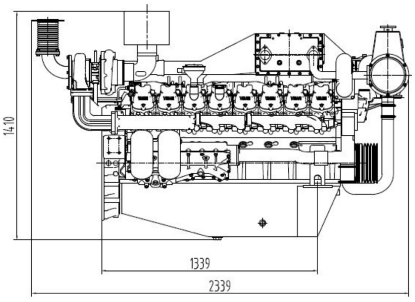

D30C

Marine Auxiliary Engine Of CE Series

Model	Type	Speed (rpm)	Power (HP)	Power (kW)	Disp. (L)
CE12C1	L6	1500	426	318	11.8
CE12C2		1800	430	321	
CE13C1	L6	1500	547	408	12.8
CE13C2		1800	548	409	

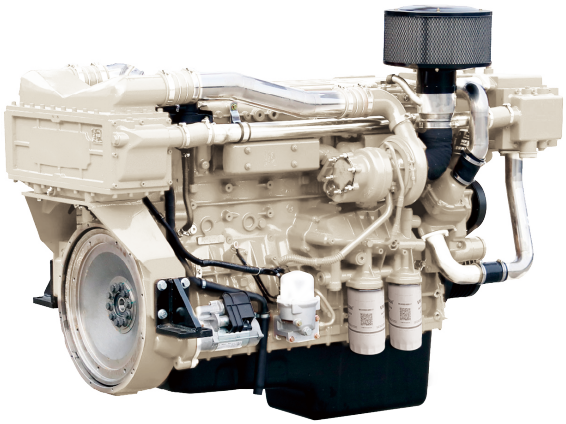

Note:

1. *No reduction in rating for intake air temperature is up to 45°C (318K) and sea water temperature is up to 32 °C (305K) , relative humidity is up to 60 % all data are based on operation to ISO 3046;*
2. *Operation hours are unlimited per year, at average load is up to 90 %, at full load is up to 80 %;*

CE SERIES MARINE AUXILIARY ENGINE SPECIFICATION

Engine Model	CE12C1	CE12C2	CE13C1	CE13C2
Engine Type	4 cycle,direct- injection, water cooled with wet turbo charger & inter-cooler			
	L6 type			
Rating output (kW/rpm)	318/1500	321/1800	408/1500	409/1800
Rating output (HP/rpm)	426/1500	430/1800	547/1500	548/1800
Displacement (L)	11.8		12.8	
Cylinder number - bore(Φ) x stroke (mm)	6- Φ128 x 153		16- Φ130 x 161	
Valve clearance at cold - In / Ex (mm)	0.4 / 0.65			
Low idling (rpm)	650 ± 25			
No load max. (rpm)	<1858			
Mean effective pressure (kg/cm2)	20.2		21.7	
Mean piston speed (m/sec)	7.6	9.2	8.06	9.66
Compression ratio	17 : 1			
Firing order	1-5-3-6-2-4			
Governor type of injection pump	Common rail with ECU			
Fuel consumption (g/kW.h)	197	190	197	190
Fuel consumption (Lit./h)	74	72	95	91
Injection timing (B.T.D.C)	4.5 °± 3°	7.5 °± 3°	4 °± 3.5°	10 °± 1.5°

Marine Auxiliary Engine Of CE Series

CE SERIES MARINE AUXILIARY ENGINE SPECIFICATION

Engine Model	CE12C1	CE12C2	CE13C1	CE13C2
Starting system	Electric Starting by starter motor			
Starter motor capacity (V - kW)	24-7.5			
Alternator capacity (V - A)	24-70			
Battery (V - Ah)	24-150			
Cooling system	Indirect sea water cooling with heat exchanger			
Cooling water capacity - Max. / Min (lit.)	45/40			
Fresh water pump type	Centrifugal type, driven by belt			
Sea water pump type	Bronze impeller type driven by belt			
Lubricating oil - pan capacity (lit.)	Max:37, Min:33		Max:41, Min:38	
Lubricating oil - pressure (kg/cm2)	Full : 5.6; Idle : 1.57			
Direction of revolution - crankshaft	Counter clockwise viewed from stern side			
Engine Size (L x W x H) (mm)	1780 x984 x1549		1780 x1014 x1510	
Engine dry weight (kg)	1265		1170	

CE SERIES MARINE AUXILIARY ENGINE DRAWING

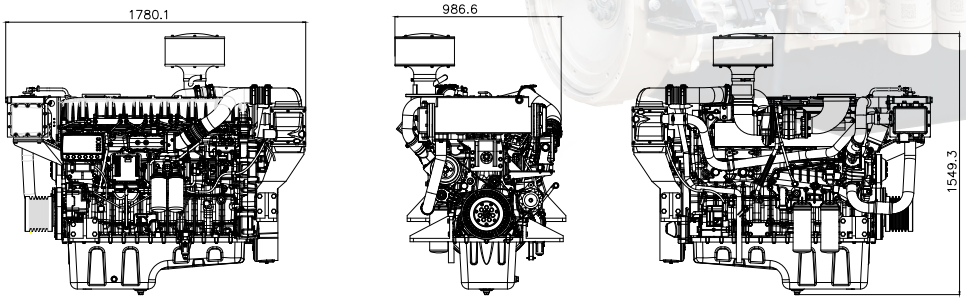

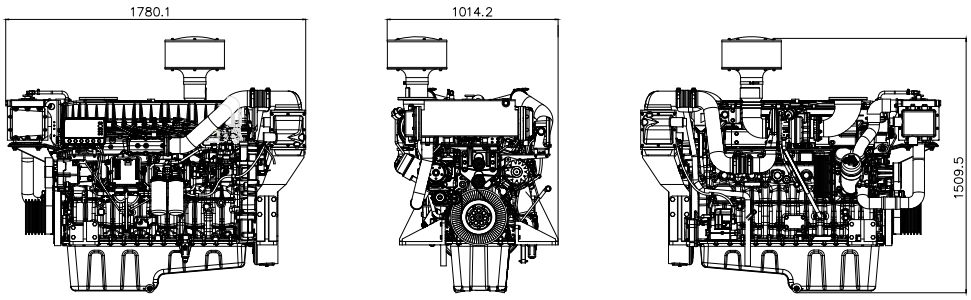

: Room 1216, No, 275-8 Guoding East Road, Shanghai
200433 China

: 50 Raffles Place, #34-04 Singapore Land Tower
048623 Singapore

Website

Linked In

info@vman-engine.com
www.vman-engine.com